S T S L A B

RADIO TEST REPORT

Report No: STS1711221W01

Issued for

Vonino Electronics LTD

Unit 1109, 11/F., Kowloon Centre, 33 Ashley Road, Tsim Sha Tsui, Kowloon, Hong Kong

Draft

Product Name:	mobilephone
Brand Name:	Vonino
Test Model Name:	NONO33
Series Model:	Nono M, Nono J, Nono Q, Nono Z
Test Standard:	ETSI EN 301 511 V12.5.1 (2017-03)
	ETSI TS 151 010-1 V12.8.0 (2016-05)

Any reproduction of this document must be done in full. No single part of this document may be reproduced without permission from STS, All Test Data Presented in this report is only applicable to presented Test sample.

Shenzhen STS Test Services Co., Ltd.
1/F., Building B, Zhuoke Science Park, No.190, Chongqing Road,
Fuyong Street, Bao'an District, Shenzhen, Guangdong, China
TEL: +86-755 3688 6288 FAX: +86-755 3688 6277 E-mail:sts@stsapp.com

TEST REPORT CERTIFICATION

Applicant's name ..... : Vonino Electronics LTD

Address..... : Unit 1109, 11/F., Kowloon Centre, 33 Ashley Road, Tsim Sha Tsui, Kowloon, Hong Kong

Manufacture's Name ..... : Hona (HK) Technology Limited

Address..... : Room 603, 6/F, Block R2-B, No.20, Gaoxin S.Ave.7th, Southern Section, Hi-tech Industrial Park, Nanshan District, Shenzhen, China

Product description

Product name..... : mobilephone

Trade mark ..... : Vonino

Test model name..... : NONO33

Series model..... : Nono M, Nono J, Nono Q, Nono Z

Standards ..... : ETSI EN 301 511 V12.5.1 (2017-03)
ETSI TS 151 010-1 V12.8.0 (2016-05)

This device described above has been tested by STS, the test results show that the equipment under test (EUT) is in compliance with the 2014/53/EU RED Directive Art 3.2 requirements. And it is applicable only to the tested sample identified in the report.

This report shall not be reproduced except in full, without the written approval of STS, this document may be altered or revised by STS, personal only, and shall be noted in the revision of the document.

Date of Test .....:

Date (s) of performance of tests .....: 21 Nov. 2017 ~24 Nov. 2017

Date of Issue .....: 24 Nov. 2017

Test Result.....: **Pass**

Testing Engineer : Sean She

(Sean she)

Technical Manager : Hakim. hou

(Hakim.hou)

Authorized Signatory : Vita Li

(Vita Li)

Draft

TABLE OF CONTENTS

1. TESTING LABORATORY 8

1.1 LOCATION 8

1.2 MEASUREMENT UNCERTAINTY 8

1.3 TEST ITEM 9

1.4 REFERENCE DOCUMENTS AND TEST STANDARDS 10

1.5 ADDITIONAL INFORMATION 10

2. TECHNICAL TEST 11

2.1 SUMMARY OF TEST RESULTS 11

2.2 TEST ENVIRONMENT 11

2.3 MEASUREMENT AND TEST SETUP 11

2.4 TEST EQUIPMENT UTILISED 12

3. TRANSMITTER - FREQUENCY ERROR AND PHASE ERROR 13

3.1 APPLIED PROCEDURES / LIMIT 13

3.2 TEST PROCEDURES 13

3.3 TEST SETUP LAYOUT 13

3.4 TEST RESULTS 13

4. TRANSMITTER - FREQUENCY ERROR UNDERMULTIPATH AND INTERFERENCE CONDITIONS 14

4.1 APPLIED PROCEDURES / LIMIT 14

4.2 TEST PROCEDURES 14

4.3 TEST SETUP LAYOUT 14

4.4 TEST RESULTS 14

5. FREQUENCY ERROR AND PHASE ERROR IN GPRS MULTISLOT CONFIGURATION 15

5.1 APPLIED PROCEDURES / LIMIT 15

5.2 TEST PROCEDURES 15

5.3 TEST SETUP LAYOUT 15

5.4 TEST RESULTS 15

6. TRANSMITTER OUTPUT POWER AND BURST TIMING 16

6.1 APPLIED PROCEDURES / LIMIT 16

6.2 TEST PROCEDURES 16

6.3 TEST SETUP LAYOUT 16

6.4 TEST RESULTS 16

Draft

TABLE OF CONTENTS

7. TRANSMITTER - OUTPUT RF SPECTRUM 17
7.1 APPLIED PROCEDURES / LIMIT 17
7.2 TEST PROCEDURES 17
7.3 TEST SETUP LAYOUT 17
7.4 TEST RESULTS 17
8. TRANSMITTER OUTPUT POWER IN GPRS MULTISLOT CONFIGURATION 18
8.1 APPLIED PROCEDURES / LIMIT 18
8.2 TEST PROCEDURES 18
8.3 TEST SETUP LAYOUT 18
8.4 TEST RESULTS 18
9. OUTPUT RF SPECTRUM IN GPRS MULTISLOT CONFIGURATION 19
9.1 APPLIED PROCEDURES / LIMIT 19
9.2 TEST PROCEDURES 19
9.3 TEST SETUP LAYOUT 19
9.4 TEST RESULTS 19
10. CONDUCTED SPURIOUS EMISSIONS 20
10.1 APPLIED PROCEDURES / LIMIT 20
10.2 TEST PROCEDURES 20
10.3 TEST SETUP LAYOUT 20
10.4 TEST RESULTS 20
11. RADIATED SPURIOUS EMISSIONS 21
11.1 APPLIED PROCEDURES / LIMIT 21
11.2 TEST PROCEDURES 21
11.3 TEST SETUP LAYOUT 21
11.4 TEST RESULTS 21
12. RECEIVER BLOCKING AND SPURIOUS RESPONSE 22
12.1 APPLIED PROCEDURES / LIMIT 22
12.2 TEST PROCEDURES 22
12.3 TEST SETUP LAYOUT 22
12.4 TEST RESULTS 22
13. AM SUPPRESSION - SPEECH CHANNELS 23
13.1 APPLIED PROCEDURES / LIMIT 23
13.2 TEST PROCEDURES 23

Draft

TABLE OF CONTENTS

13.3 TEST SETUP LAYOUT 23
13.4 TEST RESULTS 23

14. INTERMODULATION REJECTION 24
14.1 APPLIED PROCEDURES / LIMIT 24
14.2 TEST PROCEDURES 24
14.3 TEST SETUP LAYOUT 24
14.4 TEST RESULTS 24

15. ADJACENT CHANNEL REJECTION 25
15.1 APPLIED PROCEDURES / LIMIT 25
15.2 TEST PROCEDURES 25
15.3 TEST SETUP LAYOUT 25
15.4 TEST RESULTS 25

16. REFERENCE SENSITIVITY 26
16.1 APPLIED PROCEDURES / LIMIT 26
16.2 TEST PROCEDURES 26
16.3 TEST SETUP LAYOUT 26
16.4 TEST RESULTS 26

17. MINIMUM INPUT LEVEL FOR REFERENCE PERFORMANCE-GPRS 27
17.1 APPLIED PROCEDURES / LIMIT 27
17.2 TEST PROCEDURES 27
17.3 TEST SETUP LAYOUT 27
17.4 TEST RESULTS 27

18: PICS/PIXIT INFORMATION OF THE EUT 28

19: TEST RESULT 29
Appendix A. Transmitter - frequency error and phase error 29
Appendix B. Frequency error under multipath and interference conditions 33
Appendix C. Frequency error and phase error in GPRS multislot configuration 36
Appendix D. Transmitter - Frequency error and phase error test slot 39
Appendix E. Transmitter output power and burst timing 41
Appendix F. Graphs of output power and burst timing 43
Appendix G. Transmitter output power in GPRS multislot configuration 44
Appendix H. Test slot for transmitter output power in GPRS multislot configuration 45
Appendix I. Transmitter – output RF spectrum 46

Draft

TABLE OF CONTENTS

Appendix J. Graphs of output RF spectrum	47
Appendix K. Output RF spectrum in GPRS multislot configuration	48
Appendix L. Graphs of output RF spectrum in GPRS multislot configuration	49
Appendix M. Conducted spurious emissions	50
Appendix N. Radiated spurious emissions	52
Appendix O. Receiver Blocking	56
Appendix P. AM suppression	57
Appendix Q. Intermodulation rejection	58
Appendix R. Adjacent channel rejection	59
Appendix S. Reference sensitivity	60
Appendix T. Minimum input level for reference performance-GPRS	61

Draft

Revision History

Rev.	Issue Date	Report NO.	Effect Page	Contents
00	24 Nov. 2017	STS1711221W01	ALL	Initial Issue
Note: **Format version** of the report -V01				

Draft

1. TESTING LABORATORY

1.1 LOCATION

Company Name:	Shenzhen STS Test Services Co., Ltd.
Address:	1/F., Building B, Zhuoke Science Park, No.190, Chongqing Road, Fuyong Street, Bao'an District, Shenzhen, Guangdong, China
Telephone:	+86-755 3688 6288
Fax:	+86-755 3688 6277
Registration No. :	CNAS Registration No.: L7649; FCC Registration No.: 625569
	IC Registration No.: 12108A; A2LA Certificate No.: 4338.01;

1.2 MEASUREMENT UNCERTAINTY

The reported uncertainty of measurement **y** ± **U**,where expended uncertainty **U** is based on a standard uncertainty multiplied by a coverage factor of **k=2**,providing a level of confidence of approximately **95** %。

No.	Item	Uncertainty
1	RF power,conducted	±0.71dB
2	Spurious emissions,conducted	±0.63dB
3	Spurious emissions,radiated(>1G)	±2.25dB
4	Spurious emissions,radiated(<1G)	±2.21dB

Draft

1.3 TEST ITEM

Identification of the Equipment under Test

Product Name	mobilephone
Brand Name	Vonino
Model Name	NONO33
Series Model	Nono M, Nono J, Nono Q, Nono Z
Model Variation Description	Only different in model name,appearance and colors
Frequency Bands	GSM 900: 880 ~ 915 MHz(TX) 925 ~ 960 MHz (RX) GSM 1800: 1710 ~ 1785 MHz(TX) 1805 ~ 1880 MHz(RX)
Modulation Mode	GMSK for GPRS
SIM Card	SIM 1 and SIM 2 is a chipset unit and tested as single chipset,SIM 1 is used to tested
Power Class	GSM900: 4, GSM1800: 1
Multislot Class	GPRS: 12
Adapter	Power supply and ADP(rating): Input: AC 100V-240V, 50/60Hz, 200mA Output: DC 5V, 500mA
Battery	Battery(rating): Rated Voltage: 3.7V Charge Limit: 4.2V Capacity: 800mAh
Antenna Type	PIFA
Hardware version number	H668M10-C10
Software version number	Nono_33_6531E_QQVGA_V07_20171110

Draft

1.4 REFERENCE DOCUMENTS AND TEST STANDARDS

Document	Description	Version
ETSI TS 151 010-1 V12.8.0	Digital cellular telecommunications system (Phase 2+); Mobile Station (MS) conformance specification; Part 1: Conformance specification (ETSI TS 151 010-1 version 12.8.0 Release 12)	V12.8.0 (2016-05)
EN 301 511	Global System for Mobile communications (GSM); Mobile Stations (MS) equipment; Harmonised Standard covering the essential requirements of article 3.2 of Directive 2014/53/EU	V12.5.1 (2017-03)

1.5 ADDITIONAL INFORMATION

None

Draft

2. TECHNICAL TEST

2.1 SUMMARY OF TEST RESULTS

No deviations from the requirements were ascertained in the course of the test performed.	☒
The deviations from the requirements as shown in clause 3 were ascertained in the course of the test performed.	☐

2.2 TEST ENVIRONMENT

Temperature:	15 … 35 °C
Relative humidity content:	Up to 75 %
Details of power supply:	230 V AC
- Extreme test conditions:	Operating voltage of the mobile
	V_{nom} = 3.7 V DC
	V_{min} = 3.4V DC
	V_{max} = 4.2 V DC
- Extreme temperature:	-10°C / 40°C
Other parameter:	None

2.3 MEASUREMENT AND TEST SETUP

2.3.2 Radiated Test Setup

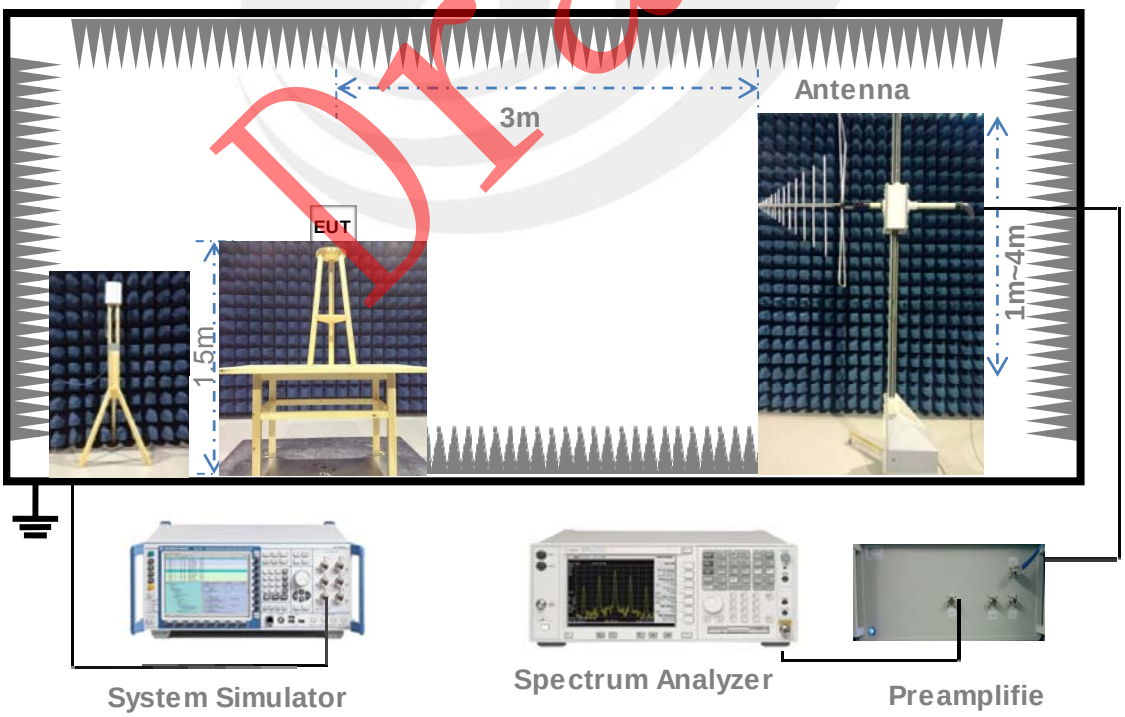

Draft

2.4 TEST EQUIPMENT UTILISED

EQUIPMENT LIST

Kind of Equipment	Manufacturer	Type No.	Serial No.	Last calibration	Calibrated until
Signal Analyzer	Agilent	N9020A	MY49100060	2017.03.11	2018.03.10
Bilog Antenna	TESEQ	CBL6111D	34678	2017.03.24	2018.03.23
Horn Antenna	Schwarzbeck	BBHA 9120D(1201)	9120D-1343	2017.03.06	2018.03.05
Power Amplifier	Agilent	8449B	60538	2017.10.15	2018.10.14
USB RF power sensor	DARE	RPR3006W	15I00041SNO04	2017.10.15	2018.10.14
Pre-mplifier (18G-40G)	MINI-CIRCUITS	AP-040G	1382501	2017.05.02	2018.05.01
Low frequency cable	EM	R01	N/A	2017.03.12	2018.03.11
Low frequency cable	EM	R06	N/A	2017.03.12	2018.03.11
High frequency cable	SCHWARZBECK	R04	N/A	2017.03.12	2018.03.11
High frequency cable	SCHWARZBECK	R02	N/A	2017.03.12	2018.03.11
trun table	EM	SC100_1	60531	N/A	N/A
Antnna mast	EM	SC100	N/A	N/A	N/A
SHF-EHF Horn Antenna (15G-40GHz)	BBHA 9170	SCHWARZBECK	BBHA9170367	2017.05.02	2018.05.01
Pre-mplifier (0.1M-3GHz)	EM	EM330	60538	2017.03.12	2018.03.11
Semi-anechoic chamber	Changling	966	N/A	2017.10.15	2018.10.14
Universal Radio Communication Tester	R&S	CMW500	117239	2017.06.15	2018.06.14
Unversal radio communication tester	R&S	CMU200	111764	2017.10.15	2018.10.14
EMI Test Receiver	R&S	ESW	101535	2017.06.01	2018.05.31
programmable power supply	Agilent	3642A	STS-S095	N.C.R	N.C.R

Draft

3. TRANSMITTER - FREQUENCY ERROR AND PHASE ERROR

3.1 APPLIED PROCEDURES / LIMIT

1. The MS carrier frequency shall be accurate to within 0,1 ppm, or accurate to within 0,1 ppm compared to signals received from the BS. For GSM 400 MS a value of 0,2 ppm shall be used in both cases.

1.1 Under normal conditions; 3GPP TS 05.10, subclause 6.1.

1.2 Under vibration conditions; 3GPP TS 05.10, subclause 6.1; 3GPP TS 05.05, annex D in subclause D.2.3.

1.3 Under extreme conditions; 3GPP TS 05.10, subclause 6.1; 3GPP TS 05.05, subclause 4.4; 3GPP TS 05.05,annex D in subclauses D.2.1 and D.2.2.

2. The RMS phase error (difference between the phase error trajectory and its linear regression on the active part of

the time slot) for each burst shall not be greater than 5 degrees.

2.1 Under normal conditions; 3GPP TS 05.05, subclause 4.6.

2.2 Under vibration conditions; 3GPP TS 05.05, subclause 4.6; 3GPP TS 05.05, annex D in subclause D.2.3.

2.3 Under extreme conditions; 3GPP TS 05.05, subclause 4.6; 3GPP TS 05.05, annex D in subclauses D.2.1 and D.2.2.

3. The maximum peak deviation during the useful part of each burst shall not be greater than 20 degrees.

3.1 Under normal conditions; 3GPP TS 05.05, subclause 4.6.

3.2 Under vibration conditions; 3GPP TS 05.05, subclause 4.6; 3GPP TS 05.05, annex D in subclause D.2.3.

3.3 Under extreme conditions; 3GPP TS 05.05, subclause 4.6; 3GPP TS 05.05, annex D in subclauses D.2.1 and D.2.2.

3.2 TEST PROCEDURES

1. Please refer to ETSI TS 151 010-1 V12.8.0 clause 13.1.2 for the test conditions.

2. Please refer to ETSI TS 151 010-1 V12.8.0 clause 13.1.2 for the measurement method.

3.3 TEST SETUP LAYOUT

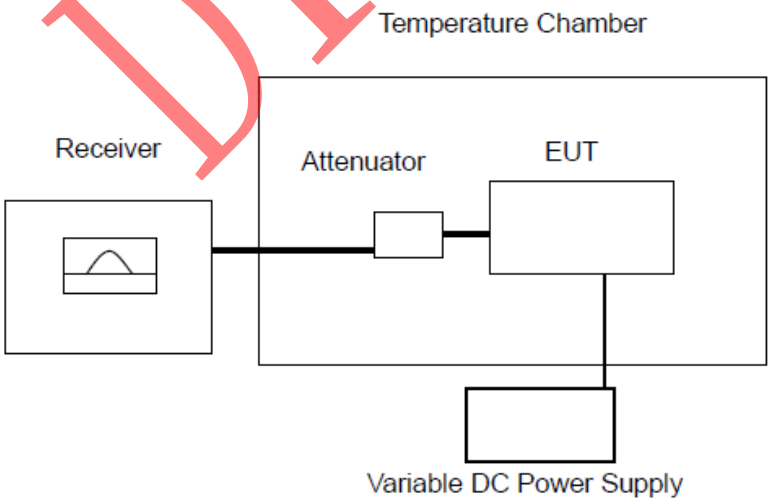

3.4 TEST RESULTS

Note: Refer to appendix A and D

Draft

4. TRANSMITTER - FREQUENCY ERROR UNDERMULTIPATH AND INTERFERENCE CONDITIONS

4.1 APPLIED PROCEDURES / LIMIT

The frequency error, with reference to the SS carrier frequency as measured in repeats of step e), for each measured burst shall be less than the values shown in tables 13-1a and 13-1b

T-GSM 810, GSM 850 and GSM 900		DCS 1 800		PCS 1 900	
Propagation condition	Permitted frequency error	Propagation condition	Permitted frequency error	Propagation condition	Permitted frequency error
RA250	±300 Hz	RA130	±400 Hz	RA130	±420 Hz
HT100	±180 Hz	HT100	±350 Hz	HT100	±370 Hz
TU50	±160 Hz	TU50	±260 Hz	TU50	±280 Hz
TU3	±230 Hz	TU1.5	±320 Hz	TU1.5	±330 Hz

4.2 TEST PROCEDURES

1. Please refer to ETSI TS 151 010-1 V12.8.0 clause 13.2.3 for the test conditions.
2. Please refer to ETSI TS 151 010-1 V12.8.0 clause 13.2.4 for the measurement method.

4.3 TEST SETUP LAYOUT

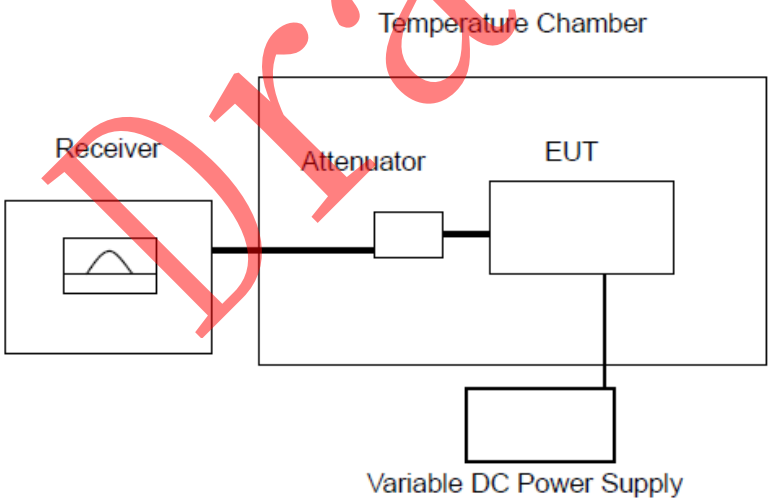

4.4 TEST RESULTS

Note:Refer to appendix B

Draft

5. FREQUENCY ERROR AND PHASE ERROR IN GPRS MULTISLOT CONFIGURATION

5.1 APPLIED PROCEDURES / LIMIT

1. For all measured bursts, the frequency error, derived in step c.6), shall be less than 10E-7
2. For all measured bursts, the RMS phase error, derived in step c.8), shall not exceed 5 degrees.
3.For all measured bursts, each individual phase error, derived in step c.7), shall not exceed 20 degrees

5.2 TEST PROCEDURES

1. Please refer to ETSI TS 151 010-1 V12.8.0 clause 13.16.1.2 for the test conditions.
2. Please refer to ETSI TS 151 010-1 V12.8.0 clause 13.16.1.3 for the measurement method.

5.3 TEST SETUP LAYOUT

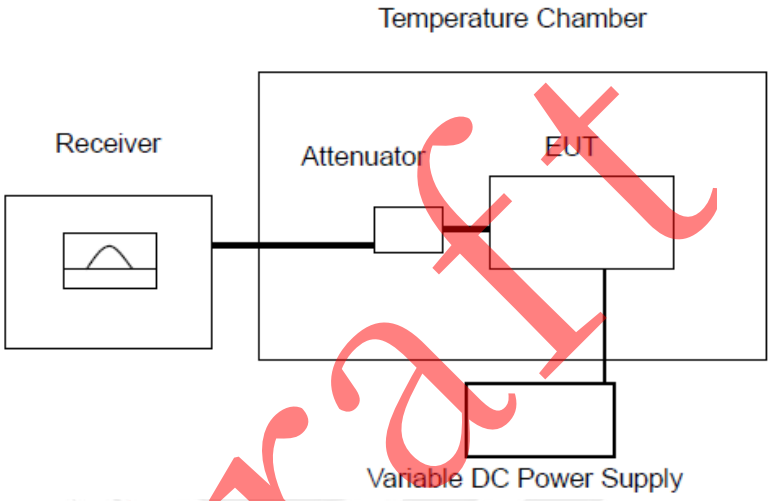

5.4 TEST RESULTS

Note:Refer to appendix C and D

Draft

6. TRANSMITTER OUTPUT POWER AND BURST TIMING

6.1 APPLIED PROCEDURES / LIMIT

Please refer to ETSI TS 151 010-1 V12.8.0 clause 13.3.5

6.2 TEST PROCEDURES

1. Please refer to ETSI TS 151 010-1 V12.8.0 clause 13.3.3 for the test conditions.
2. Please refer to ETSI TS 151 010-1 V12.8.0 clause 13.3.4 for the measurement method.

6.3 TEST SETUP LAYOUT

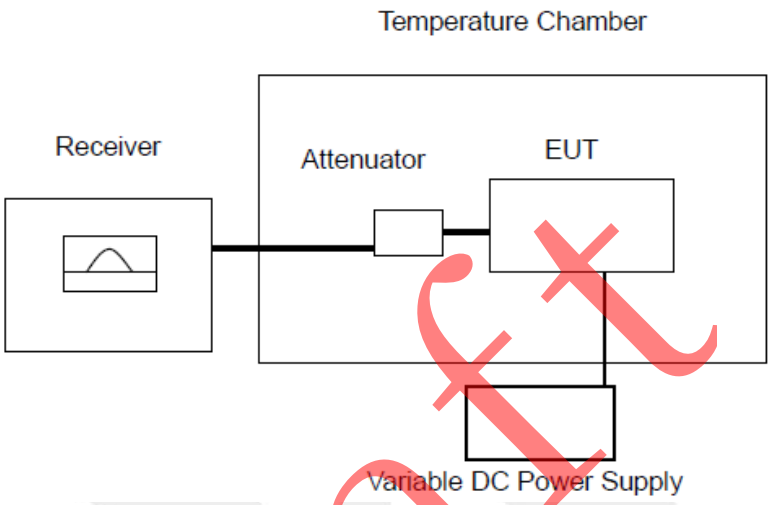

6.4 TEST RESULTS

Note:Refer to appendix E and F

Draft

7. TRANSMITTER - OUTPUT RF SPECTRUM

7.1 APPLIED PROCEDURES / LIMIT

Please refer to ETSI TS 151 010-1 V12.8.0 clause 13.4.5

7.2 TEST PROCEDURES

1. Please refer to ETSI TS 151 010-1 V12.8.0 clause 13.4.3 for the test conditions.
2. Please refer to ETSI TS 151 010-1 V12.8.0 clause 13.4.4 for the measurement method.

7.3 TEST SETUP LAYOUT

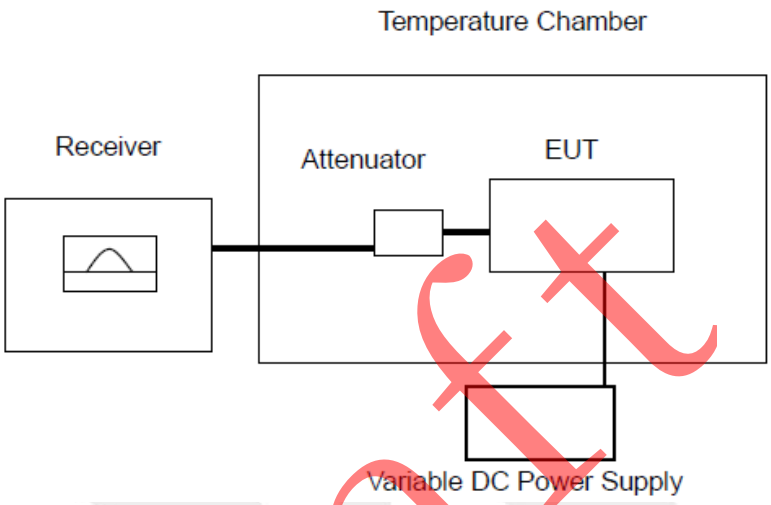

7.4 TEST RESULTS

Note:Refer to appendix I and J

Draft

8. TRANSMITTER OUTPUT POWER IN GPRS MULTISLOT CONFIGURATION

8.1 APPLIED PROCEDURES / LIMIT

Please refer to ETSI TS 151 010-1 V12.8.0 clause 13.16.2.5

8.2 TEST PROCEDURES

1. Please refer to ETSI TS 151 010-1 V12.8.0 clause 13.16.2.3 for the test conditions.
2. Please refer to ETSI TS 151 010-1 V12.8.0 clause 13.16.2.4 for the measurement method.

8.3 TEST SETUP LAYOUT

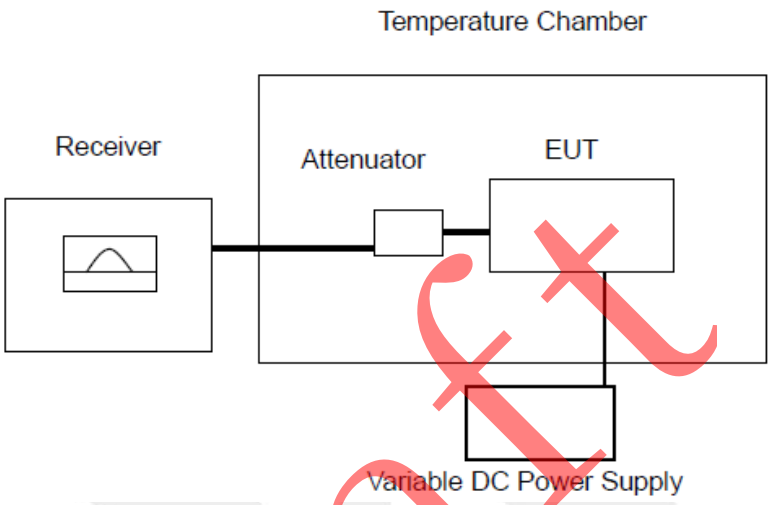

8.4 TEST RESULTS

Note:Refer to appendix G and H

Draft

9. OUTPUT RF SPECTRUM IN GPRS MULTISLOT CONFIGURATION

9.1 APPLIED PROCEDURES / LIMIT

Please refer to ETSI TS 151 010-1 V12.8.0 clause 13.16.3.5

9.2 TEST PROCEDURES

1. Please refer to ETSI TS 151 010-1 V12.8.0 clause 13.16.3.3 for the test conditions.
2. Please refer to ETSI TS 151 010-1 V12.8.0 clause 13.16.3.4 for the measurement method.

9.3 TEST SETUP LAYOUT

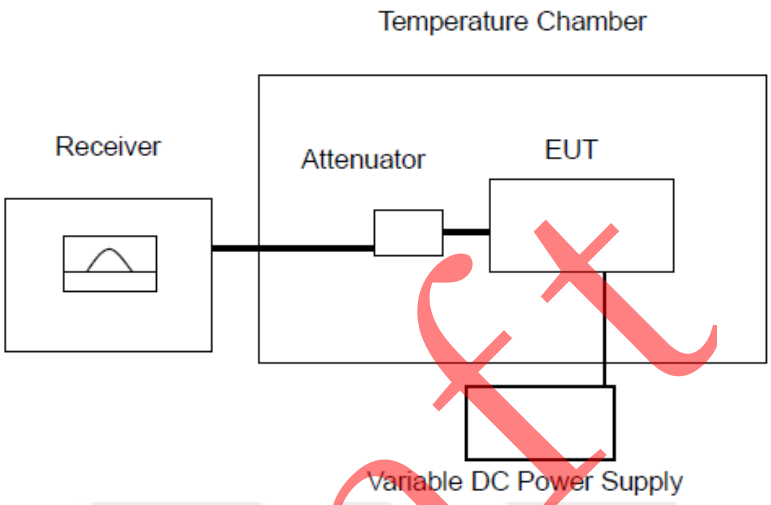

9.4 TEST RESULTS

Note:Refer to appendix K and L

Draft

10. CONDUCTED SPURIOUS EMISSIONS

10.1 APPLIED PROCEDURES / LIMIT

The power of any spurious emission shall not exceed the levels given in below table

MS allocated a channel,

Frequency range	Power level in dBm		
	GSM 400, GSM 700, T-GSM 810 GSM 850, GSM 900	DCS 1 800	PCS 1 900
100 kHz to 1 GHz	-36	-36	-36
1 GHz to 12,75 GHz	-30		-30
1 GHz to 1 710 MHz		-30	
1 710 MHz to 1 785 MHz		-36	
1 785 MHz to 12,75 GHz		-30	

MS in idle mode

Frequency range		Power level in dBm	
		GSM 400, T-GSM 810 GSM 900, DCS 1 800	**GSM 700, GSM 850, PCS 1 900**
100 kHz to	880 MHz	-57	-57
880 MHz to	915 MHz	-59	-57
915 MHz	1 000 MHz	-57	-57
1 GHz to	1 710 MHz	-47	
1 710 MHz to	1 785 MHz	-53	
1 785 MHz to	12,75 GHz	-47	
1 GHz to	1 850 MHz		-47
1 850 MHz to	1 910 MHz		-53
1 910 MHz to	12,75 GHz		-47

10.2 TEST PROCEDURES

1. Please refer to ETSI TS 151 010-1 V12.8.0 clause 12.1.1.3&12.1.2.3 for the test conditions.
2. Please refer to ETSI TS 151 010-1 V12.8.0 clause 12.1.1.4&12.1.2.4 for the measurement method.

10.3 TEST SETUP LAYOUT

Refer to clause 2.3

10.4 TEST RESULTS

Note:Refer to appendix M

Draft

11. RADIATED SPURIOUS EMISSIONS

11.1 APPLIED PROCEDURES / LIMIT

The power of any spurious emission shall not exceed the levels given in below table

MS allocated a channel

Frequency range	Power level in dBm		
	GSM 400, GSM 700, T-GSM 810 GSM 850, GSM 900	DCS 1 800	PCS 1 900
30 MHz to 1 GHz	-36	-36	-36
1 GHz to 4 GHz	-30		-30
1 GHz to 1 710 MHz		-30	
1 710 MHz to 1 785 MHz		-36	
1 785 MHz to 4GHz		-30	

MS in idle mode

Frequency range		Power level in dBm	
		GSM 400, T-GSM 810 GSM 900, DCS 1 800	**GSM 700, GSM 850, PCS 1 900**
30 MHz to	880 MHz	-57	-57
880 MHz to	915 MHz	-59	-57
915 MHz	1 000 MHz	-57	-57
1 GHz to	1 710 MHz	-47	
1 710 MHz to	1 785 MHz	-53	
1 785 MHz to	4 GHz	-47	
1 GHz to	1 850 MHz		-47
1 850 MHz to	1 910 MHz		-53
1 910 MHz to	4 GHz		-47

11.2 TEST PROCEDURES

1. Please refer to ETSI TS 151 010-1 V12.8.0 clause 12.2.1.3&12.2.2.3 for the test conditions.
2. Please refer to ETSI TS 151 010-1 V12.8.0 clause 12.2.1.4&12.2.2.4 for the measurement method.

11.3 TEST SETUP LAYOUT

Refer to clause 2.3

11.4 TEST RESULTS

Note:Refer to appendix N

Draft

12. RECEIVER BLOCKING AND SPURIOUS RESPONSE

12.1 APPLIED PROCEDURES / LIMIT

The fixed testing of the conformance requirement is done using the minimum number of samples and the limit RBER given in table

Channel	Type of measurement	Test limit error rate %	Minimum number of samples
TCH/FS Class II	RBER	2,439	8 200

12.2 TEST PROCEDURES

1. Please refer to ETSI TS 151 010-1 V12.8.0 clause 14.7.1.5&14.18.5.5 for the test conditions.
2. Please refer to ETSI TS 151 010-1 V12.8.0 clause 14.7.1.4&14.18.5.4 for the measurement method.

12.3 TEST SETUP LAYOUT

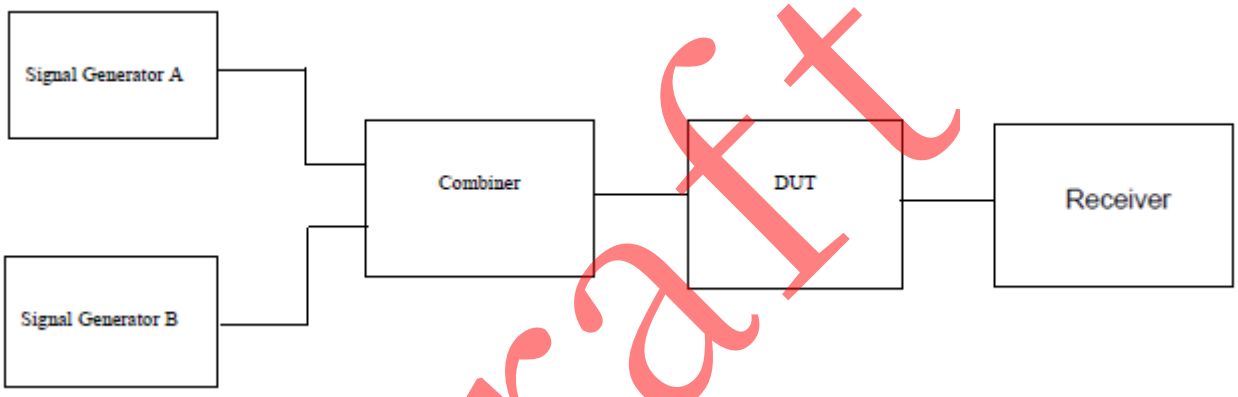

12.4 TEST RESULTS

Note:Refer to appendix O

Draft

13. AM SUPPRESSION - SPEECH CHANNELS

13.1 APPLIED PROCEDURES / LIMIT

The error rates measured in this test shall not exceed the test limit error rate values given in table

Channel	Type of measurement	Test limit error rate %	Minimum number of samples
TCH/FS Class II	RBER	2,439	8 200

13.2 TEST PROCEDURES

1. Please refer to ETSI TS 151 010-1 V12.8.0 clause 14.8.1.4 for the measurement method.

13.3 TEST SETUP LAYOUT

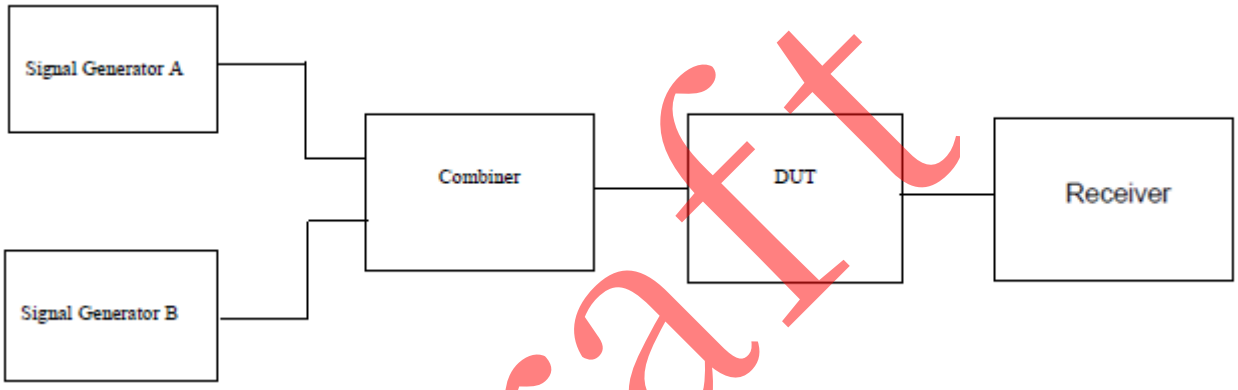

13.4 TEST RESULTS

Note:Refer to appendix P

Draft

14. INTERMODULATION REJECTION

14.1 APPLIED PROCEDURES / LIMIT

Limits for Intermodulation rejection - speech channels

Channel	Propagation conditions	Type of measurement	Test limit error rate %	Minimum number of samples
TCH/FS Class II	Static	RBER	2,439	8 200

Limits for Intermodulation rejection - control channels

			GSM 400, GSM 700, T-GSM 810, GSM 850 and GSM 900		DCS 1 800 and PCS 1 900	
Channel	Propagation conditions	Type of measurement	Test limit error rate %	Minimum No. of max-samples	Test limit error rate %	Min No. of max-samples
FACCH/F	TUhigh/No FH	FER	8,961	6 696	4,368	13 736

14.2 TEST PROCEDURES

1. Please refer to ETSI TS 151 010-1 V12.8.0 clause 14.6.1.4.2& clause 14.6.2.4.2 for the measurement method.

14.3 TEST SETUP LAYOUT

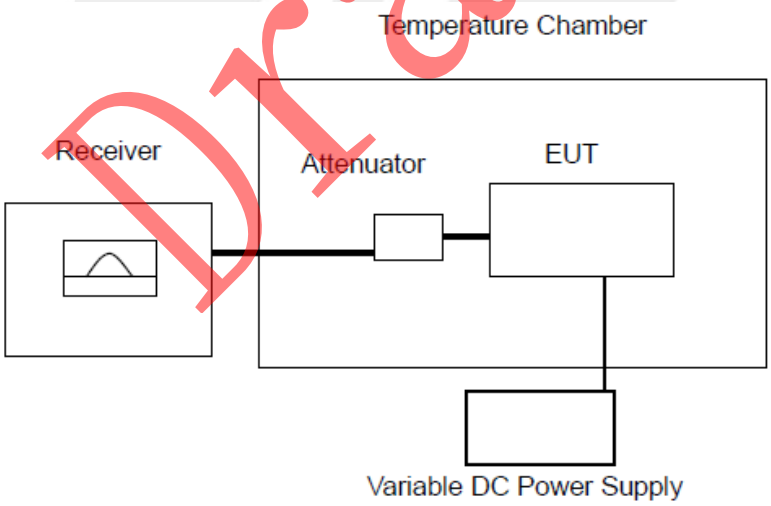

14.4 TEST RESULTS

Note:Refer to appendix Q

Draft

15. ADJACENT CHANNEL REJECTION

15.1 APPLIED PROCEDURES / LIMIT

Limits for adjacent channel selectivity-speech channels

			SM 400, GSM 700, T-GSM, 810, GSM 850 and GSM 900		DCS 1 800 and PCS 1 900	
Interference at	Channel	Type of measurement	Test limit error rate%	Minimum No. of samples	Test limit error rate%	Minimum No. of samples
200 kHz	TCH/FS class Ib class II	FER RBER RBER	6,742*α 0,420/α 8,333	8 900 1 000 000 600 000	3,371*α 0,270/α 8,333	17 800 2 000 000 1 200 000
400 kHz Interferer TUhight	TCH/FS class Ib class II	FER RBER RBER	6,742*α 0,420/α 8,333	8 900 1 000 000 600 000	3,371*α 0,270/α 8,333	17 800 2 000 000 1 200 000
400 kHz Interferer Static	TCH/FS class Ib class II	FER RBER RBER	11,461*α 0,756/α 9,167	8 900 1 000 000 600 000	5,714*α 0,483/α 9,167	10 500 1 200 000 720 000

Limits for adjacent channel selectivity- control channels

Interference at	**Channel**	**Type of measurement**	**Test limit error rate %**	**Minimum No. of samples**	**Test limit error rate %**	**Minimum No. of samples**
200 kHz/400 kHz interferer faded	Propagation conditions	FER	10,640	5 639	3,808	15 756
400 kHz interferer static	FACCH/F	FER	19,152	3 133	6,832	8 782

15.2 TEST PROCEDURES

1. Please refer to ETSI TS 151 010-1 clause 14.5.1.4&14.5.2.4 for the measurement method.

15.3 TEST SETUP LAYOUT

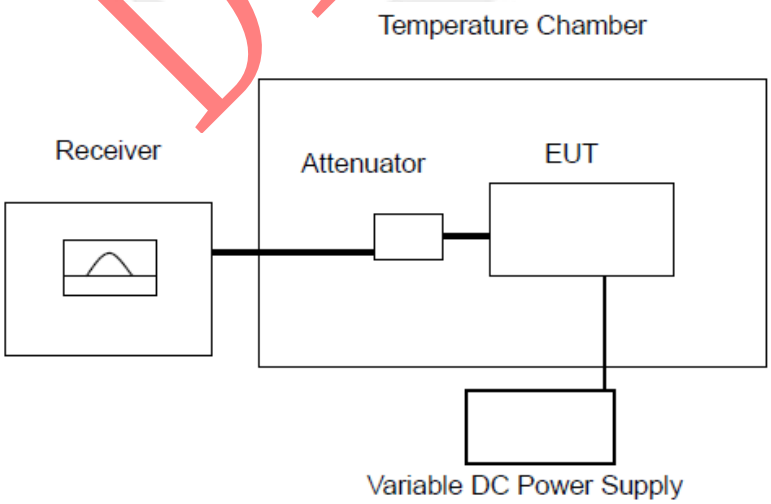

15.4 TEST RESULTS

Note:Refer to appendix R

Draft

16. REFERENCE SENSITIVITY

16.1 APPLIED PROCEDURES / LIMIT

Limits for GSM 400, GSM 700, T-GSM 810, GSM 850 and GSM 900 sensitivity

Channels	Propagation conditions TUhigh		Propagation conditions RA		Propagation conditions HT		Static conditions	
	Test limit error rate %	Minimum No. of samples	Test limit error rate %	Minimum No. of samples	Test limit error rate %	Minimum No. of samples	Test limit error rate %	Minimum No. of samples
TCH/FS FER class Ib(RBER) class II(RBER)	6,742*α 0,42/α 8,333	8 900 1 000 000 120 000	7,5	24 000	9,333	60 000	0,122*α 0,41/α 2,439	164 000 20 000 000 8 200

Limits for DCS 1 800 and PCS 1 900 sensitivity

Channels	Propagation conditions TUhigh		Propagation conditions RA		Propagation conditions HT		Static conditions	
	Test limit error rate %	Minimum No. of samples	Test limit error rate %	Minimum No. of samples	Test limit error rate %	Minimum No. of samples	Test limit error rate %	Minimum No. of samples
TCH/FS FER class Ib(RBER) class II(RBER)	4478*α 0.32/α 8,333	13400 1 500 000 60 000	7,5	24 000	9,333	30 000	0,122*α 0,41/α 2,439	164 000 20 000 000 8 200

Limits for FACCH/F sensitivity

			GSM 400, GSM 700, T-GSM 810, GSM 850 and GSM 900		DCS 1 800 and PCS 1 900	
Channels	Type of measurements	Propagation	Test limit error rate %	Minimum No of samples	Test limit error rate %	Minimum No of samples
FACCH/F	FER	TUhigh	8,961	6696	4,368	13736

16.2 TEST PROCEDURES

1. Please refer to ETSI TS 151 010-1 clause 14.2.1.4&14.2.3.4 for the measurement method.

16.3 TEST SETUP LAYOUT

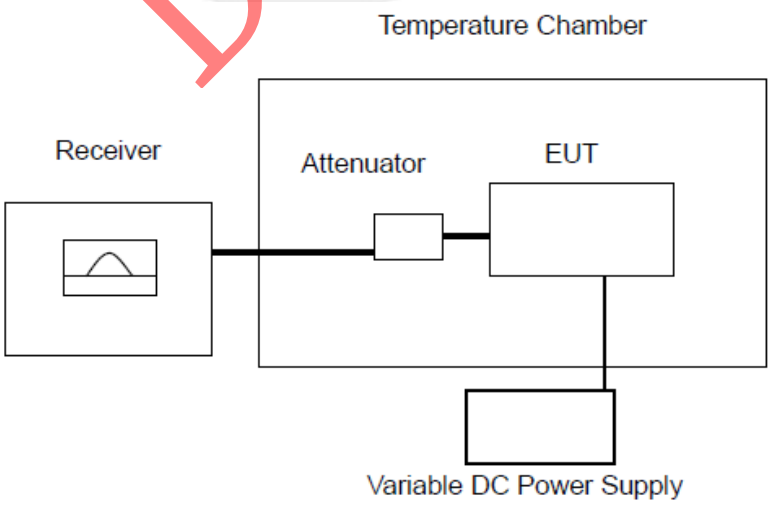

16.4 TEST RESULTS

Note:Refer to appendix S

Draft

17. MINIMUM INPUT LEVEL FOR REFERENCE PERFORMANCE-GPRS

17.1 APPLIED PROCEDURES / LIMIT

The block error rate (BLER) performance shall not exceed 10 % at input levels according to the table below

Type of channel		Propagation conditions				
		static	TUhigh (no FH)	TUhigh (ideal FH)	RA (no FH)	HT (no FH)
GSM 400, GSM 700, GSM 850 and GSM 900						
PDTCH/CS-1	dBm	-104	-104	-104	-104	-103
PDTCH/CS-2	dBm	-104	-100	-101	-101	-99
PDTCH/CS-3	dBm	-104	-98	-99	-98	-96
PDTCH/CS-4	dBm	-101	-90	-90	*	*
DCS 1 800 and PCS 1 900						
PDTCH/CS-1	dBm	-104	-104	-104	-104	-103
PDTCH/CS-2	dBm	-104	-100	-100	-101	-99
PDTCH/CS-3	dBm	-104	-98	-98	-98	-94
PDTCH/CS-4	dBm	-101	-88	-88	*	*

The input levels given in the above Table are referenced to normal GSM 900 MS, and have to be corrected by the following values for other MS:

GSM 400, GSM 700, GSM 850 and GSM 900 small MS +2 dB

DCS 1800 class 1 or 2 MS +2/+4 dB**

DCS 1800 class 3 and PCS 1 900 class 1 or 2 MS +2 dB

PCS 1 900 class 3 MS 0 dB

** For all DCS 1 800 class 1 and class 2 MS, a correction offset of +2dB shall apply for the reference sensitivity performance as specified in table 1a for the normal conditions defined in Annex D and an offset of +4 dB shall be used to determine all other MS performances.

17.2 TEST PROCEDURES

1. Please refer to ETSI TS 151 010-1 clause 14.16.1.4 for the measurement method.

17.3 TEST SETUP LAYOUT

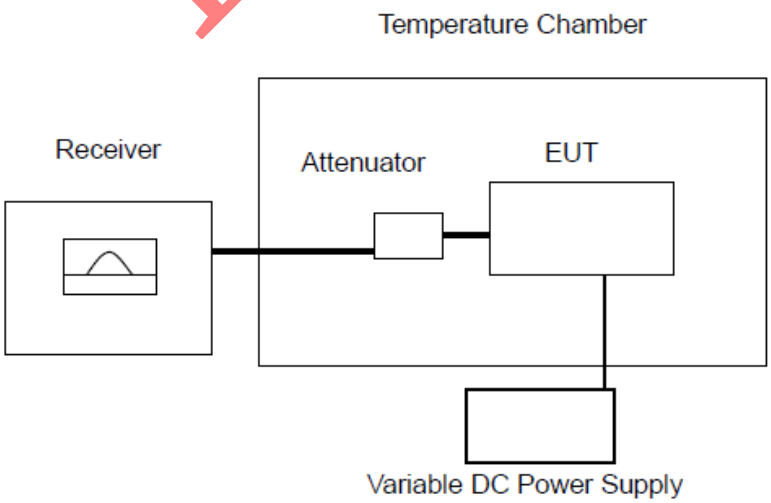

17.4 TEST RESULTS

Note:Refer to appendix T

Draft

18: PICS/PIXIT INFORMATION OF THE EUT

TABLE A.1: TYPE OF MOBILE STATION (RE. ETSI EN301 511 Annex A)

Item	Type of Mobile Station	Support	Mnemonic
1	HSCSD Multislot MS	N	Type_HSCSD_Multislot
2	R-GSM MS	N	Type_R-GSM
3	Support of GPRS Multislot class on the uplink	Y	Type_GPRS_Multislot_uplink
4	EGPRS	N	Type_EGPRS
5	EGPRS capable of 8PSK in Uplink, of all Multislot classes	N	Type_EGPRS_8PSK_uplink

TABLE A.2: ADDITIONAL INFORMATION (Re. ETSI EN301 511 Annex A)

Item	Additional Information	Support	Mnemonic
1	Telephony.	Y	TSPC_Serv_TS11
2	Permanent Antenna Connector.	N	TSPC_AddInfo_PermAntenna

Measurement Photos

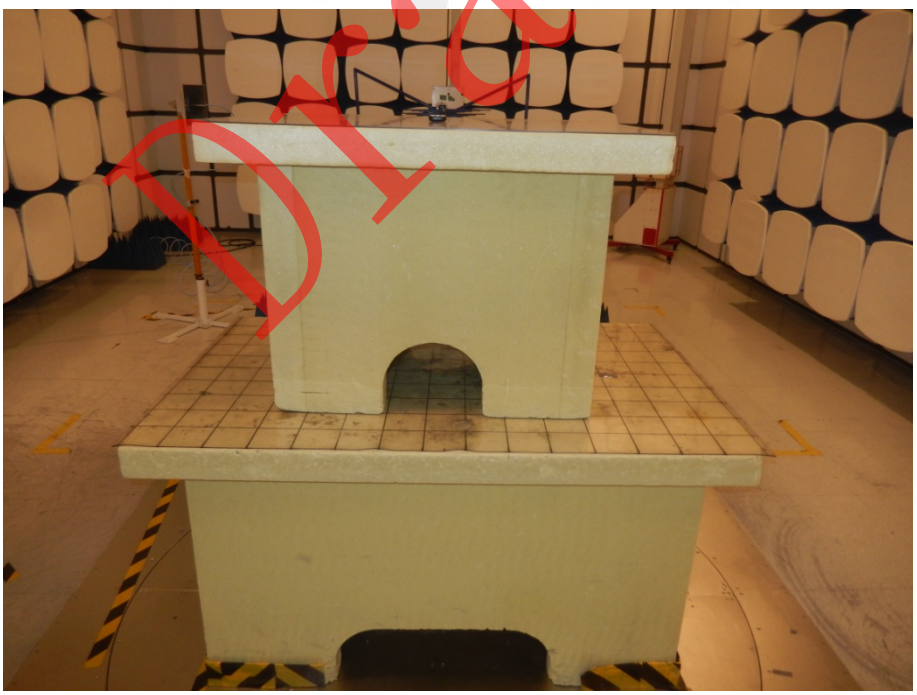

Draft

19: TEST RESULT

General Test Conditions/Configurations

GSM900	LCH	MCH	HCH
	975	60	124

DCS1800	LCH	MCH	HCH
	512	700	885

VL	VN	VH	TL	TN	TH
Low voltage	Normal voltage	High voltage	Low temperature	Normal temperature	High temperature

Appendix A. Transmitter - frequency error and phase error

RMS phase error(degree)	Power control LEVEL	Result			
		GSM900			
		ARFCN			
		LCH	MCH	HCH	Result
TN VN	5	0.8	0.4	0.6	PASS
	19	0.5	0.5	0.3	PASS
vibration conditions	5	0.9	0.3	0.4	PASS
	19	0.1	0.4	0.1	PASS
TL VL	5	0.8	0.5	0.3	PASS
	19	0.3	0.5	0.1	PASS
TL VH	5	0.6	0.4	0.9	PASS
	19	0.4	0.1	0.3	PASS
TH VL	5	1.0	0.6	0.4	PASS
	19	0.7	0.3	0.3	PASS
TH VH	5	0.6	0.4	0.5	PASS
	19	0.2	0.1	0.2	PASS

Draft

Peak phase error(degree)	Power control LEVEL	Result			
		GSM900			
		ARFCN			
		LCH	MCH	HCH	Result
TN VN	5	1.0	1.4	1.2	PASS
	19	1.5	1.4	1.6	PASS
vibration conditions	5	0.9	1.3	1.1	PASS
	19	1.7	1.3	1.6	PASS
TL VL	5	1.3	1.6	1.2	PASS
	19	1.4	1.3	1.2	PASS
TL VH	5	1.4	1.6	1.2	PASS
	19	1.1	1.3	1.6	PASS
TH VL	5	1.2	1.6	1.4	PASS
	19	1.3	1.8	1.5	PASS
TH VH	5	1.2	1.0	1.4	PASS
	19	1.5	1.4	1.8	PASS

frequency error(Hz)	Power control LEVEL	Result			
		GSM900			
		ARFCN			
		LCH	MCH	HCH	Result
TN VN	5	0	3	4	PASS
	19	5	6	8	PASS
vibration conditions	5	0	5	4	PASS
	19	7	6	8	PASS
TL VL	5	-1	2	4	PASS
	19	7	6	7	PASS
TL VH	5	-1	3	3	PASS
	19	5	7	8	PASS
TH VL	5	2	5	4	PASS
	19	3	8	7	PASS
TH VH	5	-1	2	4	PASS
	19	5	4	9	PASS

Draft

RMS phase error(degree)	Power control LEVEL	Result			
		DCS1800			
		ARFCN			
		LCH	MCH	HCH	Result
TN VN	0	0.8	0.9	0.9	PASS
	15	1.3	1.0	0.8	PASS
vibration conditions	0	0.7	0.8	0.7	PASS
	15	1.5	0.7	1.0	PASS
TL VL	0	1.0	0.9	0.8	PASS
	15	1.7	0.9	0.9	PASS
TL VH	0	1.2	1.0	1.0	PASS
	15	1.0	0.8	0.8	PASS
TH VL	0	0.6	0.7	0.7	PASS
	15	0.9	1.3	0.6	PASS
TH VH	0	0.9	1.0	0.9	PASS
	15	1.5	1.2	0.8	PASS

Peak phase error(degree)	Power control LEVEL	Result			
		DCS1800			
		ARFCN			
		LCH	MCH	HCH	Result
TN VN	0	2.2	2.6	2.5	PASS
	15	2.7	2.8	2.4	PASS
vibration conditions	0	2.2	2.7	2.2	PASS
	15	3.0	3.0	2.4	PASS
TL VL	0	1.9	2.4	2.4	PASS
	15	2.4	2.9	2.7	PASS
TL VH	0	2.4	2.4	2.2	PASS
	15	3.0	2.8	2.4	PASS
TH VL	0	2.1	2.8	2.6	PASS
	15	2.8	3.0	2.4	PASS
TH VH	0	2.4	2.2	2.5	PASS
	15	3.0	2.7	2.0	PASS

Draft

frequency error(Hz)	Power control LEVEL	Result			
		DCS1800			
		ARFCN			
		LCH	MCH	HCH	Result
TN VN	0	13	14	12	PASS
	15	10	15	9	PASS
vibration conditions	0	10	16	13	PASS
	15	11	15	9	PASS
TL VL	0	12	16	11	PASS
	15	10	14	9	PASS
TL VH	0	13	13	13	PASS
	15	9	17	8	PASS
TH VL	0	12	15	10	PASS
	15	11	15	8	PASS
TH VH	0	12	14	11	PASS
	15	9	14	9	PASS

Draft

Appendix B. Frequency error under multipath and interference conditions

Fading set	Test conditions	Power control LEVEL	Result			
			GSM900			
			ARFCN			
			LCH	MCH	HCH	Result
RA250	TNVN	5	3	8	8	PASS
		19	8	11	13	PASS
	TLVL	5	5	7	7	PASS
		19	7	11	14	PASS
	TLVH	5	4	6	8	PASS
		19	8	11	13	PASS
	THVL	5	3	10	5	PASS
		19	7	10	12	PASS
	THVH	5	4	8	7	PASS
		19	8	11	13	PASS
HT100	TNVN	5	2	8	7	PASS
		19	9	11	13	PASS
	TLVL	5	5	5	8	PASS
		19	11	10	12	PASS
	TLVH	5	8	4	9	PASS
		19	9	13	16	PASS
	THVL	5	5	6	7	PASS
		19	8	10	13	PASS
	THVH	5	5	6	8	PASS
		19	8	10	14	PASS
TU50	TNVN	5	6	6	6	PASS
		19	8	9	12	PASS
	TLVL	5	5	2	8	PASS
		19	41	23	36	PASS
	TLVH	5	6	1	8	PASS
		19	43	22	35	PASS
	THVL	5	3	2	7	PASS
		19	42	24	36	PASS
	THVH	5	6	3	7	PASS
		19	42	22	35	PASS

Draft

TU3	TNVN	5	5	2	7	PASS
		19	41	22	36	PASS
	TLVL	5	4	3	9	PASS
		19	41	25	35	PASS
	TLVH	5	41	23	36	PASS
		19	41	26	34	PASS
	THVL	5	6	4	7	PASS
		19	41	25	36	PASS
	THVH	5	6	3	5	PASS
		19	44	21	36	PASS

Fading set	Test conditions	Power control LEVEL	Result			
			DCS1800			
			ARFCN			
			LCH	MCH	HCH	Result
RA130	TNVN	0	17	17	16	PASS
		15	15	20	13	PASS
	TLVL	0	17	19	17	PASS
		15	14	19	13	PASS
	TLVH	0	15	18	17	PASS
		15	16	19	14	PASS
	THVL	0	15	18	15	PASS
		15	14	18	13	PASS
	THVH	0	17	17	15	PASS
		15	15	22	14	PASS
HT100	TNVN	0	15	16	16	PASS
		15	15	20	14	PASS
	TLVL	0	16	21	16	PASS
		15	12	21	14	PASS
	TLVH	0	17	22	17	PASS
		15	15	17	14	PASS
	THVL	0	15	19	18	PASS
		15	14	20	15	PASS
	THVH	0	14	21	15	PASS
		15	15	21	13	PASS

Draft

TU50	TNVN	0	17	20	14	PASS
		15	14	18	13	PASS
	TLVL	0	16	23	17	PASS
		15	41	23	36	PASS
	TLVH	0	16	21	16	PASS
		15	43	23	39	PASS
	THVL	0	17	22	16	PASS
		15	42	23	36	PASS
	THVH	0	14	23	17	PASS
		15	39	24	35	PASS
TU1.5	TNVN	0	15	22	18	PASS
		15	40	23	36	PASS
	TLVL	0	15	21	17	PASS
		15	41	22	35	PASS
	TLVH	0	41	23	36	PASS
		15	44	23	37	PASS
	THVL	0	15	22	18	PASS
		15	41	23	37	PASS
	THVH	0	14	21	15	PASS
		15	37	25	34	PASS

Draft

Appendix C. Frequency error and phase error in GPRS multislot configuration

RMS phase error(degree)	Power control LEVEL	Result			
		GPRS900			
		ARFCN			
		LCH	MCH	HCH	Result
TN VN	3	0.7	0.4	0.6	PASS
	17	0.5	0.4	0.3	PASS
vibration conditions	3	0.4	0.1	0.7	PASS
	17	0.4	0.5	0.3	PASS
TL VL	3	0.4	0.6	0.5	PASS
	17	0.5	0.1	0.2	PASS
TL VH	3	0.7	0.2	0.6	PASS
	17	0.2	0.3	0.5	PASS
TH VL	3	0.8	0.4	0.9	PASS
	17	0.6	0.5	0.5	PASS
TH VH	3	0.5	0.4	0.8	PASS
	17	0.7	0.4	0.5	PASS

Peak phase error(degree)	Power control LEVEL	Result			
		GPRS900			
		ARFCN			
		LCH	MCH	HCH	Result
TN VN	3	1.5	1.2	1.7	PASS
	17	1.0	1.3	1.4	PASS
vibration conditions	3	1.2	1.3	1.6	PASS
	17	1.1	1.7	1.3	PASS
TL VL	3	1.5	1.2	1.7	PASS
	17	0.6	1.5	1.1	PASS
TL VH	3	1.8	1.1	1.5	PASS
	17	1.2	1.4	1.5	PASS
TH VL	3	1.2	1.5	2.1	PASS
	17	1.4	1.0	1.5	PASS
TH VH	3	1.5	1.2	1.7	PASS
	17	1.4	1.1	1.3	PASS

Draft

frequency error(Hz)	Power control LEVEL	Result			
		GPRS900			
		ARFCN			
		LCH	MCH	HCH	Result
TN VN	3	14	11	13	PASS
	17	10	13	17	PASS
vibration conditions	3	13	12	12	PASS
	17	11	13	17	PASS
TL VL	3	15	13	12	PASS
	17	10	13	16	PASS
TL VH	3	14	11	11	PASS
	17	8	12	18	PASS
TH VL	3	15	8	15	PASS
	17	10	12	19	PASS
TH VH	3	12	12	11	PASS
	17	10	12	18	PASS

RMS phase error(degree)	Power control LEVEL	Result			
		GPRS1800			
		ARFCN			
		LCH	MCH	HCH	Result
TN VN	3	1.3	0.9	0.6	PASS
	18	0.5	0.9	1.1	PASS
vibration conditions	3	1.4	1.1	0.6	PASS
	18	0.5	0.9	1.1	PASS
TL VL	3	1.3	0.8	0.3	PASS
	18	0.8	0.8	0.7	PASS
TL VH	3	1.4	1.1	0.3	PASS
	18	0.6	0.7	0.7	PASS
TH VL	3	1.4	0.7	0.6	PASS
	18	0.9	0.5	1.0	PASS
TH VH	3	0.9	0.7	0.6	PASS
	18	0.7	1.1	1.4	PASS

Draft

Peak phase error(degree)	Power control LEVEL	Result			
		GPRS1800			
		ARFCN			
		LCH	MCH	HCH	Result
TN VN	3	2.0	2.4	1.8	PASS
	18	2.5	2.4	2.1	PASS
vibration conditions	3	1.7	2.2	1.4	PASS
	18	2.2	2.4	1.8	PASS
TL VL	3	2.1	2.6	2.1	PASS
	18	2.5	2.6	2.0	PASS
TL VH	3	2.2	2.5	1.7	PASS
	18	2.2	2.5	2.0	PASS
TH VL	3	2.1	2.5	1.7	PASS
	18	2.5	2.5	2.5	PASS
TH VH	3	1.7	2.6	2.2	PASS
	18	2.4	2.4	2.3	PASS

frequency error(Hz)	Power control LEVEL	Result			
		GPRS1800			
		ARFCN			
		LCH	MCH	HCH	Result
TN VN	3	21	25	22	PASS
	18	18	15	20	PASS
vibration conditions	3	20	24	21	PASS
	18	16	15	21	PASS
TL VL	3	20	25	21	PASS
	18	18	14	20	PASS
TL VH	3	21	24	24	PASS
	18	16	16	20	PASS
TH VL	3	21	23	20	PASS
	18	15	16	20	PASS
TH VH	3	22	23	25	PASS
	18	19	15	19	PASS

Draft

Appendix D. Transmitter - Frequency error and phase error test slot

Test slot

Middle Channel PCL(5) GSM900

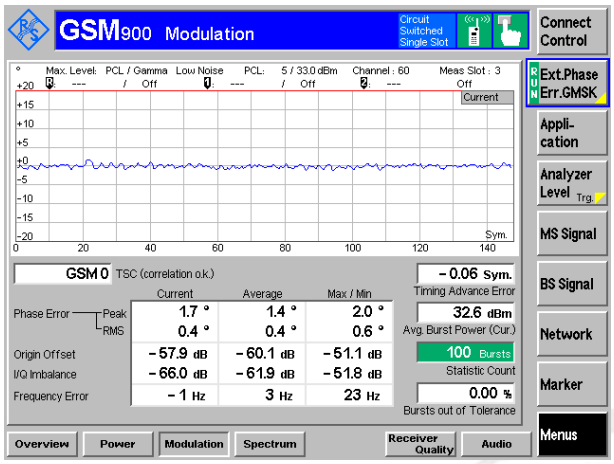

Middle Channel PCL(19) GSM900

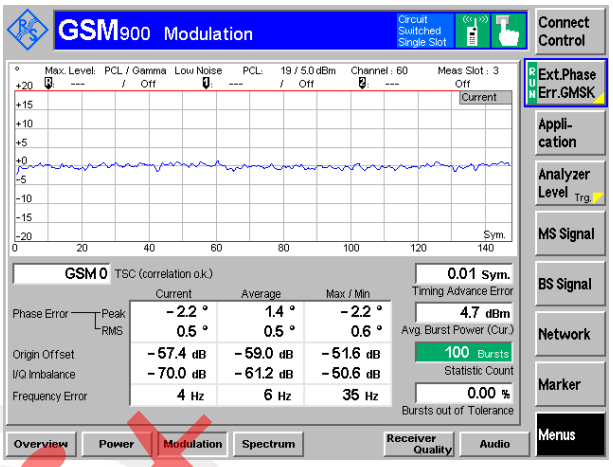

Middle Channel PCL(3) GPRS900

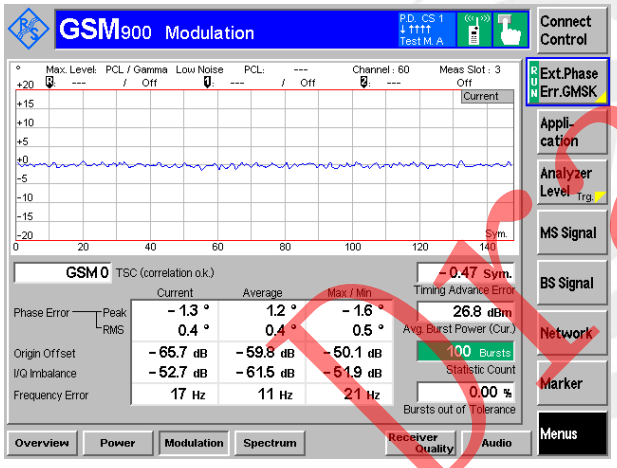

Middle Channel PCL(17) GPRS900

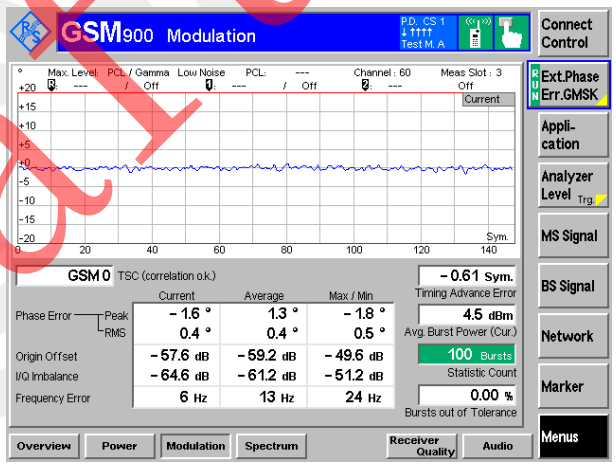

Draft

Test slot

Middle Channel PCL(0) GSM1800

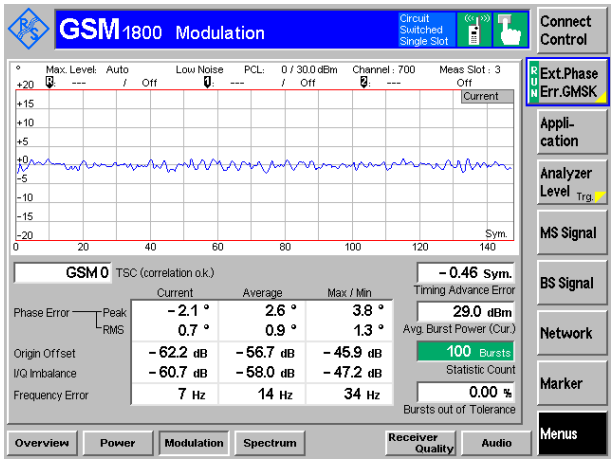

Middle Channel PCL(15) GSM1800

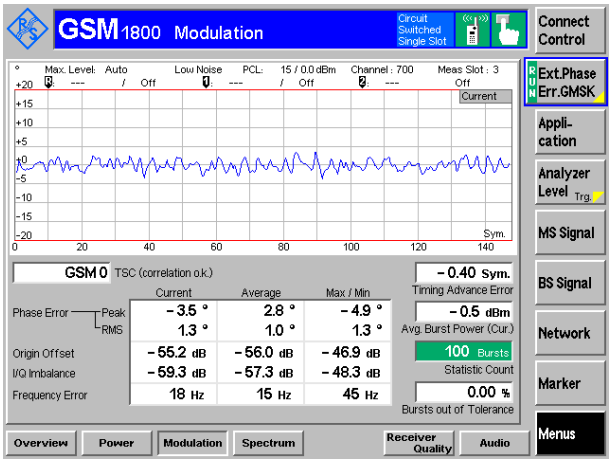

Middle Channel PCL(3) GPRS1800

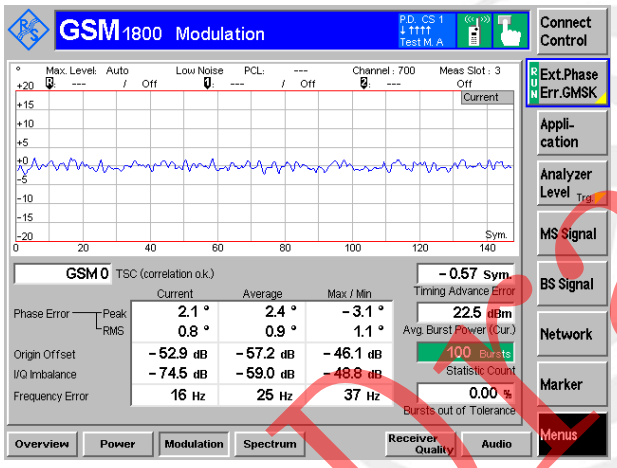

Middle Channel PCL(18) GPRS1800

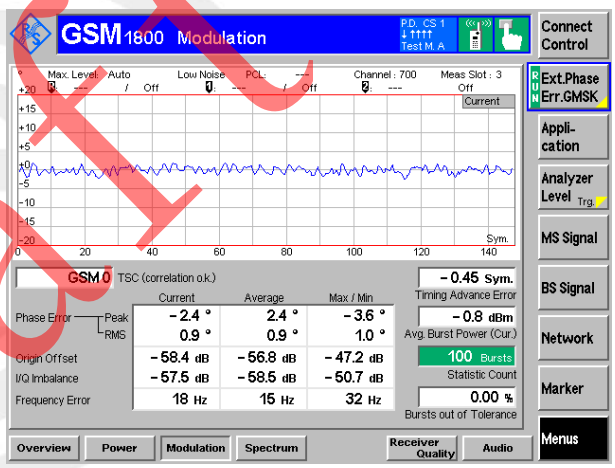

Draft

Appendix E. Transmitter output power and burst timing

GSM900 output power					
Transmitter Output power(dBm)	Power level	Result			
		Traffic Channels			
		LCH	MCH	HCH	Result
TN,VN	5	32.9	32.6	32.7	PASS
	19	4.3	4.6	4.7	PASS
TL,VL	5	32.9	32.5	32.5	PASS
	19	4.2	4.8	4.5	PASS
TL,VH	5	32.9	32.4	32.6	PASS
	19	4.2	4.6	4.3	PASS
TH,VL	5	32.8	32.2	32.5	PASS
	19	4.3	4.8	4.0	PASS
TH,VH	5	32.8	32.2	32.5	PASS
	19	4.2	4.9	4.1	PASS

DCS1800 output power					
Transmitter Output power(dBm)	Power level	Result			
		Traffic Channels			
		LCH	MCH	HCH	Result
TN,VN	0	29.7	29.8	29.6	PASS
	15	0.8	0.1	-0.6	PASS
TL,VL	0	29.9	29.7	29.8	PASS
	15	1.0	0.0	-0.5	PASS
TL,VH	0	30.1	29.7	29.6	PASS
	15	1.1	0.1	-0.6	PASS
TH,VL	0	30.0	29.7	29.7	PASS
	15	1.1	0.0	-0.4	PASS
TH,VH	0	30.1	29.7	29.9	PASS
	15	1.2	-0.2	-0.4	PASS

Draft

GSM900 Power VS Time				
Power VS Time Graph	ACCESS BURST	Result		
		Traffic Channels		
	Power level	LCH	MCH	HCH
TN,VN	5	PASS	PASS	PASS
	19	PASS	PASS	PASS
TL,VL	5	PASS	PASS	PASS
	19	PASS	PASS	PASS
TL,VH	5	PASS	PASS	PASS
	19	PASS	PASS	PASS
TH,VL	5	PASS	PASS	PASS
	19	PASS	PASS	PASS
TH,VH	5	PASS	PASS	PASS
	19	PASS	PASS	PASS

DCS1800 Power VS Time				
Power VS Time Graph	ACCESS BURST	Result		
		Traffic Channels		
	Power level	LCH	MCH	HCH
TN,VN	0	PASS	PASS	PASS
	15	PASS	PASS	PASS
TL,VL	0	PASS	PASS	PASS
	15	PASS	PASS	PASS
TL,VH	0	PASS	PASS	PASS
	15	PASS	PASS	PASS
TH,VL	0	PASS	PASS	PASS
	15	PASS	PASS	PASS
TH,VH	0	PASS	PASS	PASS
	15	PASS	PASS	PASS

Draft

Appendix F. Graphs of output power and burst timing

output power

GSM900 output power

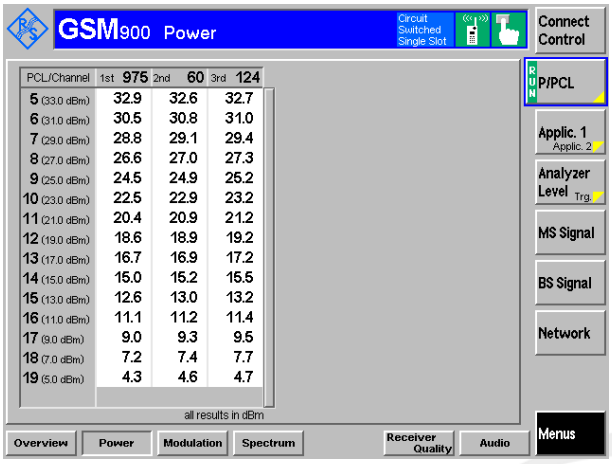

GSM1800 output power

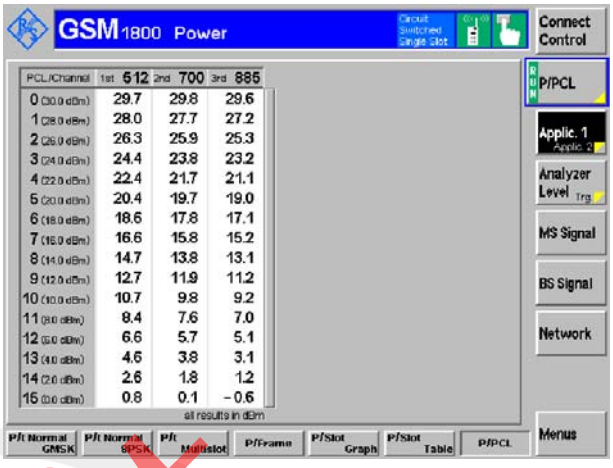

burst timing

Middle channel PCL(5) GSM900

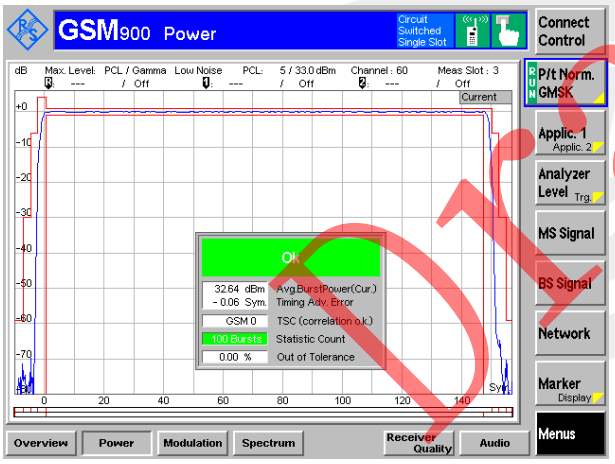

Middle channel PCL(19) GSM900

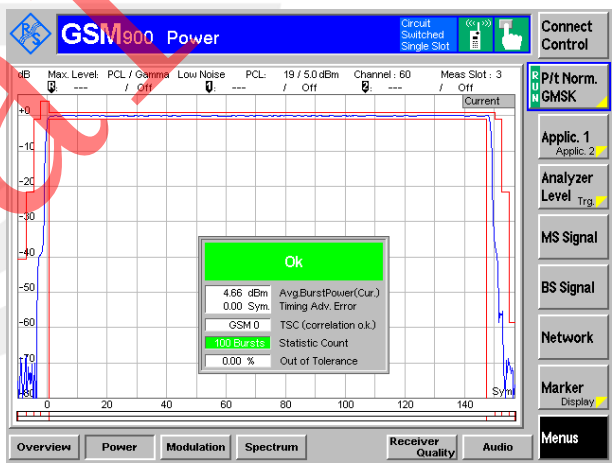

Middle channel PCL(0) GSM1800

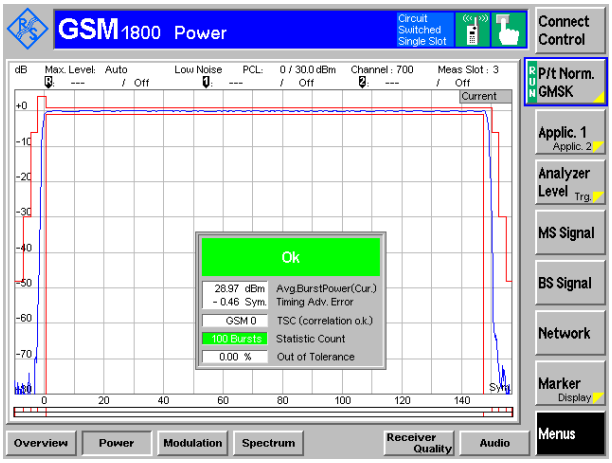

Middle channel PCL(15) GSM1800

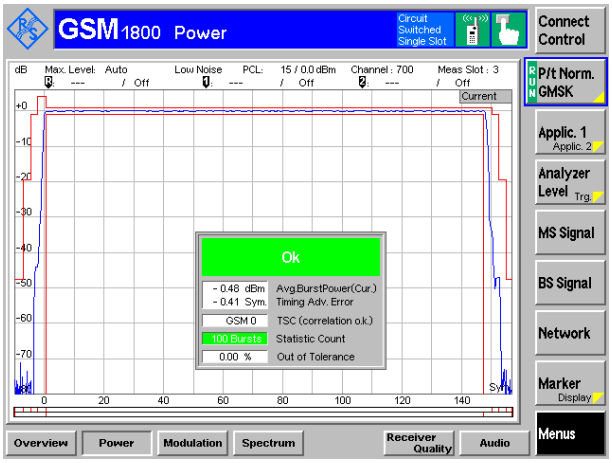

Draft

Appendix G. Transmitter output power in GPRS multislot configuration

GPRS900					
Transmitter Output power(dBm)	Power level	Result			
		Traffic Channels			
		LCH	MCH	HCH	Result
TN,VN	3	26.82	26.77	26.75	PASS
	17	4.16	4.49	4.57	PASS
TL,VL	3	26.92	26.67	26.50	PASS
	17	4.38	4.46	4.60	PASS
TL,VH	3	26.82	26.70	26.67	PASS
	17	4.45	4.31	4.62	PASS
TH,VL	3	26.71	26.65	26.83	PASS
	17	4.53	4.21	4.50	PASS
TH,VH	3	26.97	26.68	26.67	PASS
	17	4.58	4.10	4.64	PASS

GPRS1800					
Transmitter Output power(dBm)	Power level	Result			
		Traffic Channels			
		LCH	MCH	HCH	Result
TN,VN	3	25.43	22.50	22.31	PASS
	18	0.13	-0.65	-1.37	PASS
TL,VL	3	25.28	22.45	22.35	PASS
	18	0.21	-0.51	-1.34	PASS
TL,VH	3	25.18	22.44	22.47	PASS
	18	0.33	-0.59	-1.37	PASS
TH,VL	3	25.20	22.42	22.27	PASS
	18	0.33	-0.52	-1.33	PASS
TH,VH	3	25.17	22.38	22.21	PASS
	18	0.44	-0.52	-1.35	PASS

Draft

Appendix H. Test slot for transmitter output power in GPRS multislot configuration

Middle channel PCL(3) GPRS900

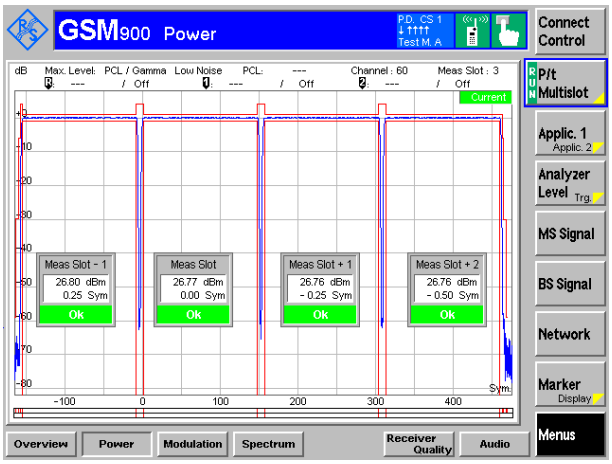

Middle channel PCL(17) GPRS900

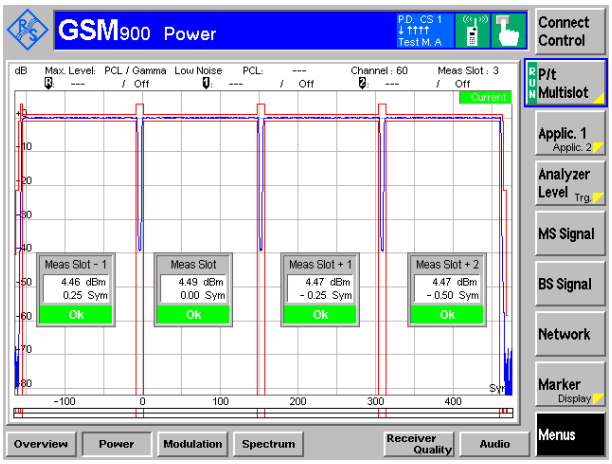

Middle channel PCL(3) GPRS1800

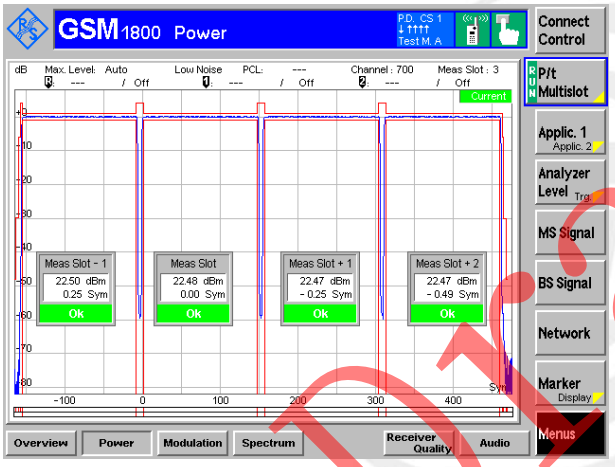

Middle channel PCL(18) GPRS1800

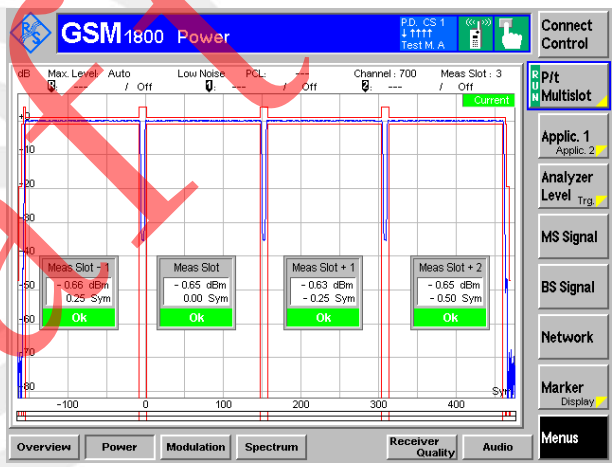

Draft

Appendix I. Transmitter – output RF spectrum

GSM900				
Modulation& switch Spectrum	Power level	Result		
		Traffic Channels		
		LCH	MCH	HCH
TN,VN	5	PASS	PASS	PASS
	19	PASS	PASS	PASS
TL,VL	5	PASS	PASS	PASS
	19	PASS	PASS	PASS
TL,VH	5	PASS	PASS	PASS
	19	PASS	PASS	PASS
TH,VL	5	PASS	PASS	PASS
	19	PASS	PASS	PASS
TH,VH	5	PASS	PASS	PASS
	19	PASS	PASS	PASS

DCS1800				
Modulation& switch Spectrum	Power level	Result		
		Traffic Channels		
		LCH	MCH	HCH
TN,VN	0	PASS	PASS	PASS
	15	PASS	PASS	PASS
TL,VL	0	PASS	PASS	PASS
	15	PASS	PASS	PASS
TL,VH	0	PASS	PASS	PASS
	15	PASS	PASS	PASS
TH,VL	0	PASS	PASS	PASS
	15	PASS	PASS	PASS
TH,VH	0	PASS	PASS	PASS
	15	PASS	PASS	PASS

Draft

Appendix J. Graphs of output RF spectrum

Middle channel PCL(5) GSM900

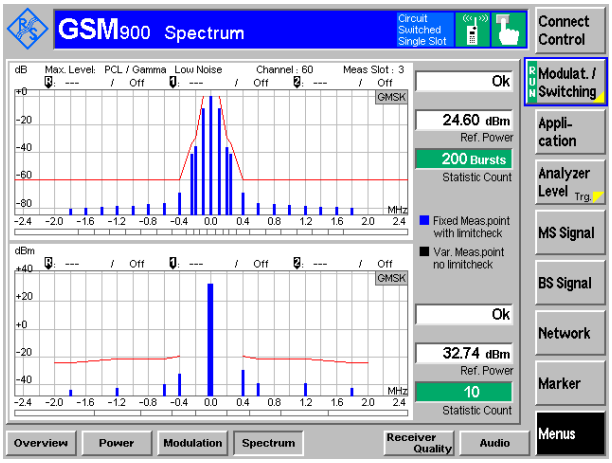

Middle channel PCL(19) GSM900

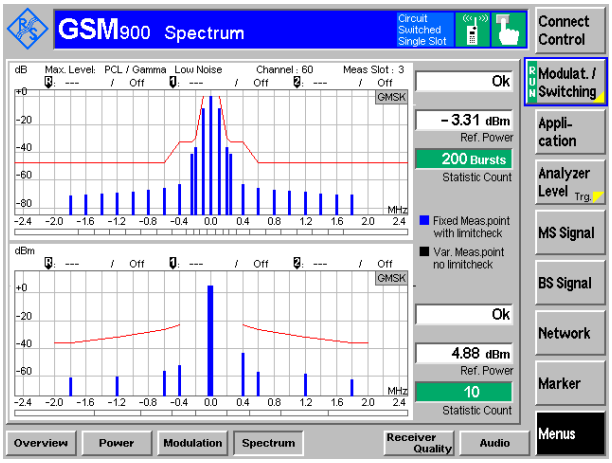

Middle channel PCL(0) GSM1800

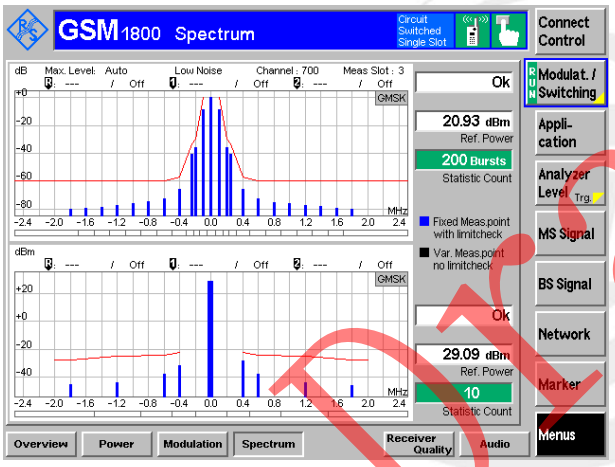

Middle channel PCL(15) GSM1800

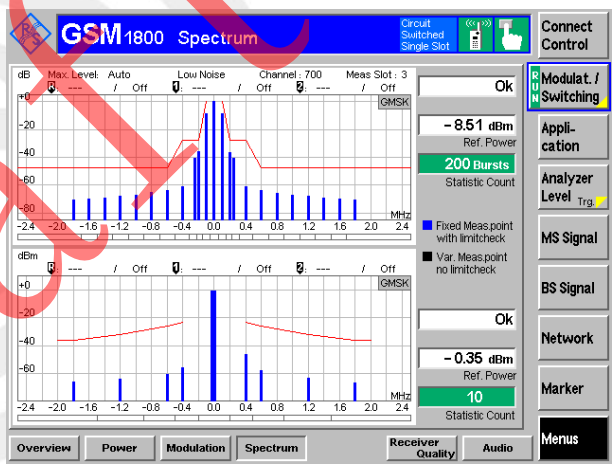

Draft

Appendix K. Output RF spectrum in GPRS multislot configuration

GPRS900				
Modulation& switch Spectrum	Power level	Result		
		Traffic Channels		
		LCH	MCH	HCH
TN,VN	3	PASS	PASS	PASS
	17	PASS	PASS	PASS
TL,VL	3	PASS	PASS	PASS
	17	PASS	PASS	PASS
TL,VH	3	PASS	PASS	PASS
	17	PASS	PASS	PASS
TH,VL	3	PASS	PASS	PASS
	17	PASS	PASS	PASS
TH,VH	3	PASS	PASS	PASS
	17	PASS	PASS	PASS

GPRS1800				
Modulation& switch Spectrum	Power level	Result		
		Traffic Channels		
		LCH	MCH	HCH
TN,VN	3	PASS	PASS	PASS
	18	PASS	PASS	PASS
TL,VL	3	PASS	PASS	PASS
	18	PASS	PASS	PASS
TL,VH	3	PASS	PASS	PASS
	18	PASS	PASS	PASS
TH,VL	3	PASS	PASS	PASS
	18	PASS	PASS	PASS
TH,VH	3	PASS	PASS	PASS
	18	PASS	PASS	PASS

Draft

Appendix L. Graphs of output RF spectrum in GPRS multislot configuration

Middle channel PCL(3) GPRS900

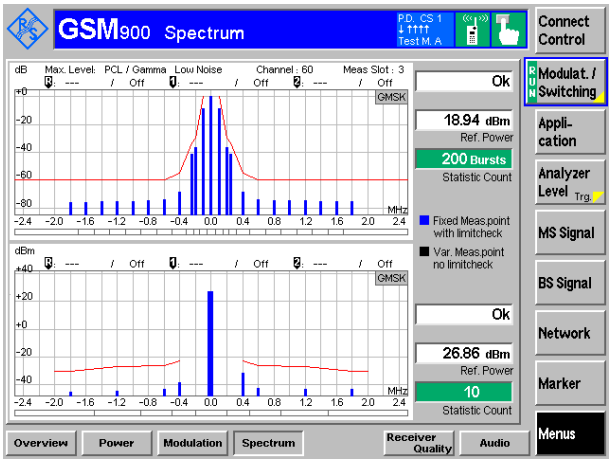

Middle channel PCL(17) GPRS900

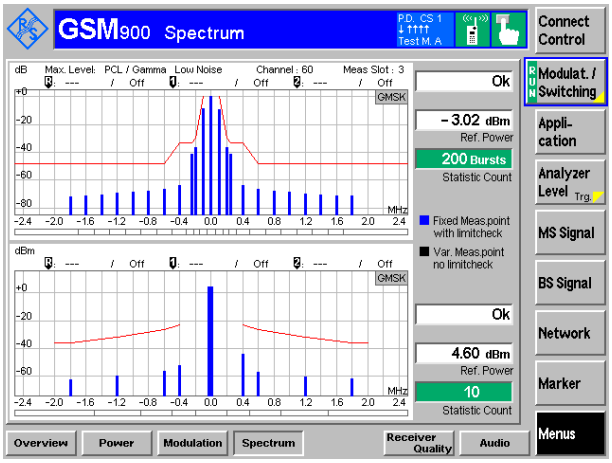

Middle channel PCL(3) GPRS1800

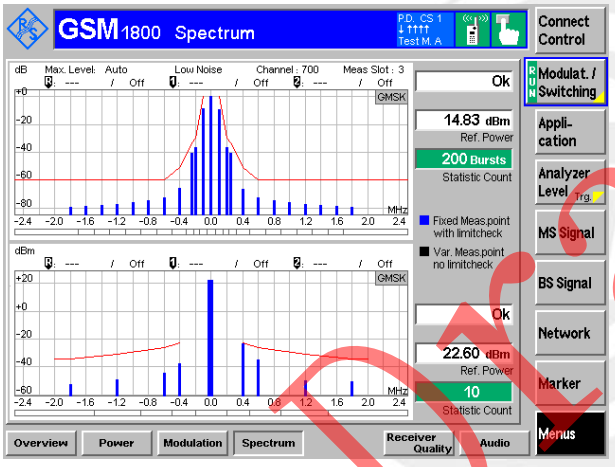

Middle channel PCL(18) GPRS1800

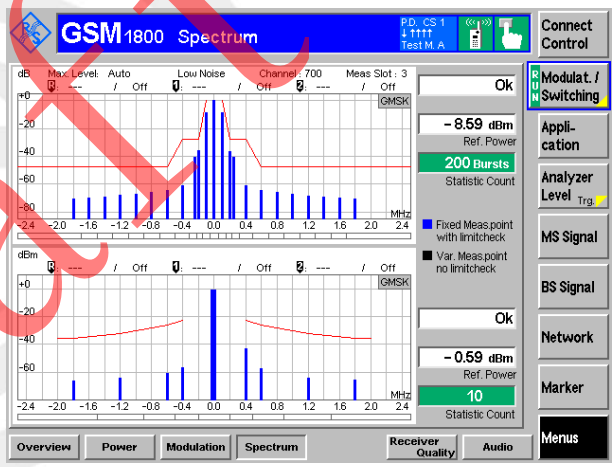

Draft

Appendix M. Conducted spurious emissions

MS allocated a channel GSM900

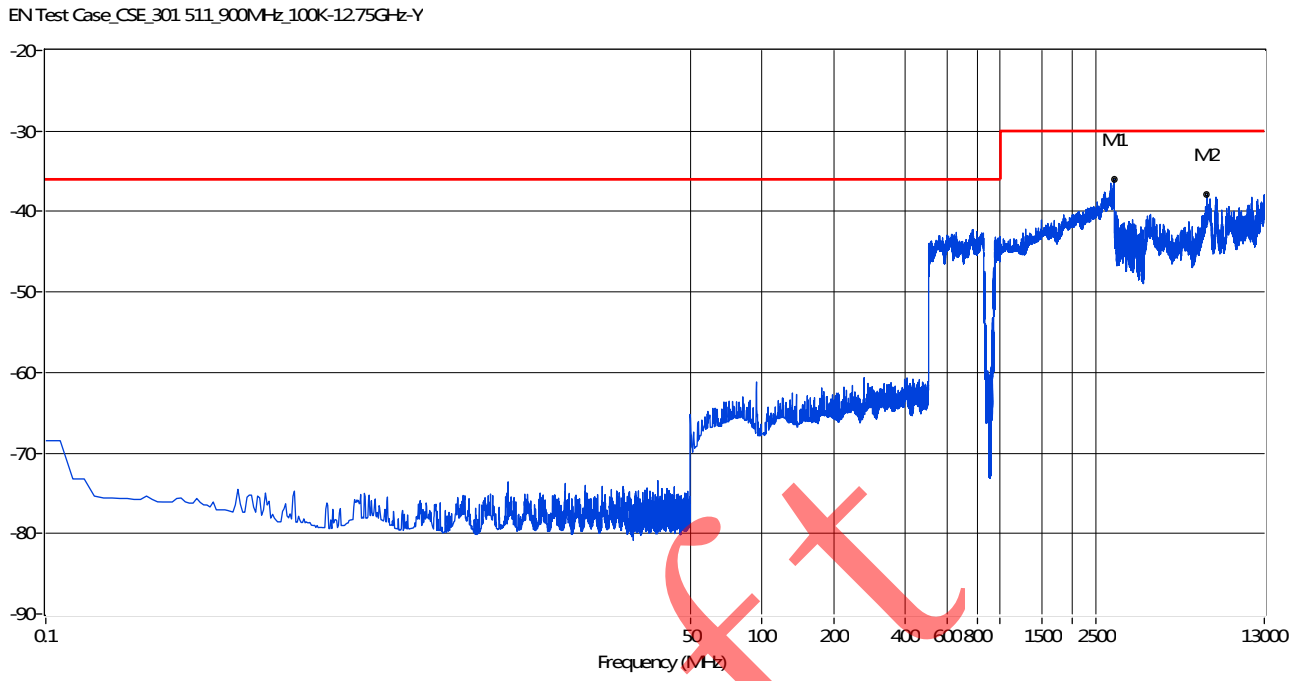

MS allocated a channel GSM1800

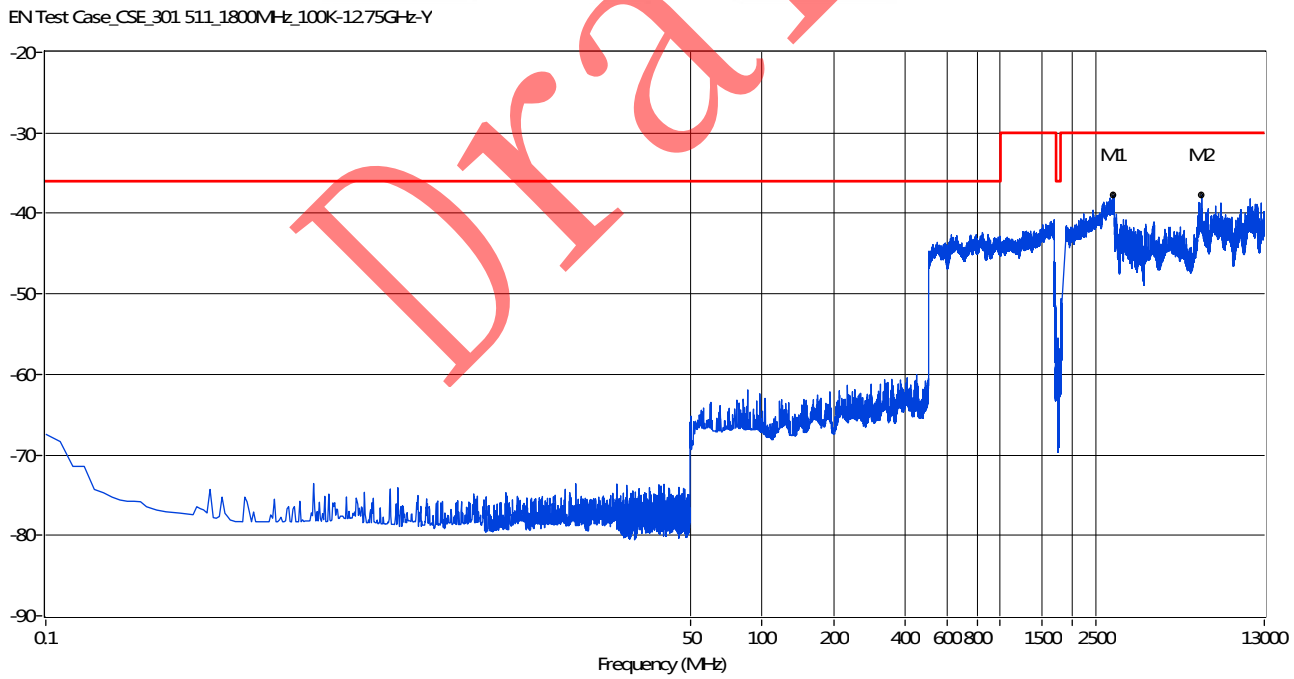

Note: The EUT is connected with the GSM base station when the BT is transmiting.

Draft

MS in idle mode GSM900

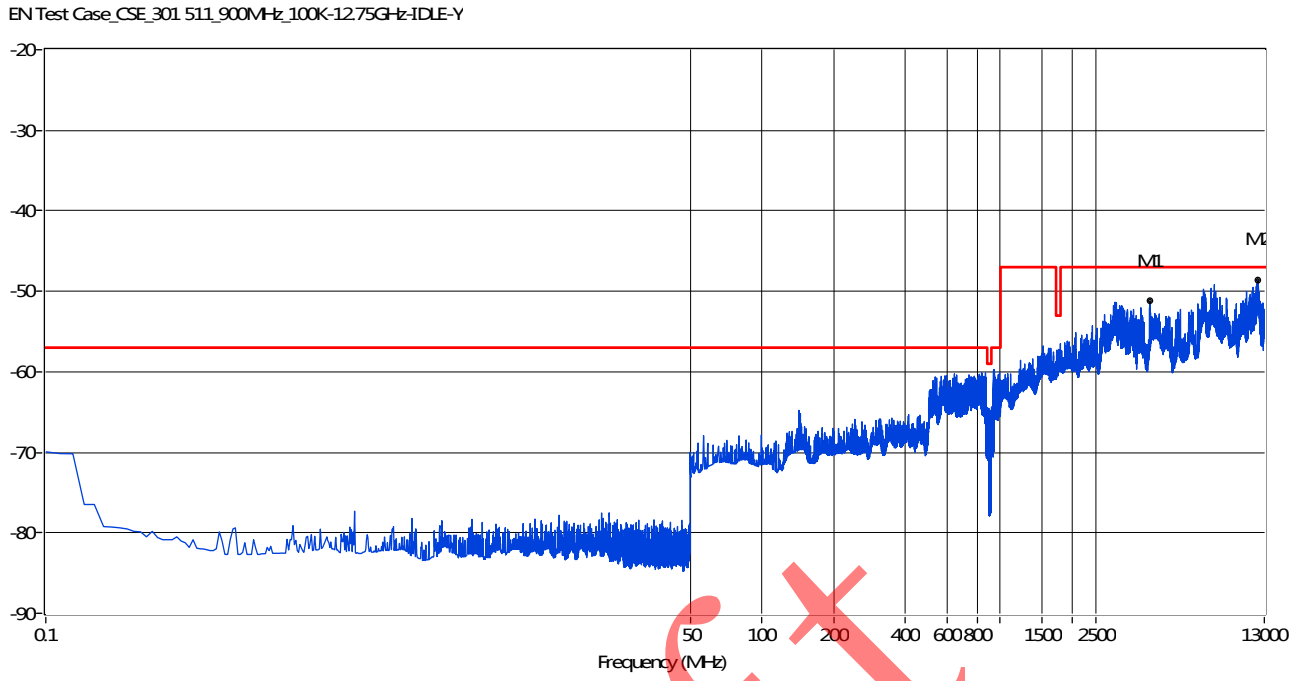

MS in idle mode GSM1800

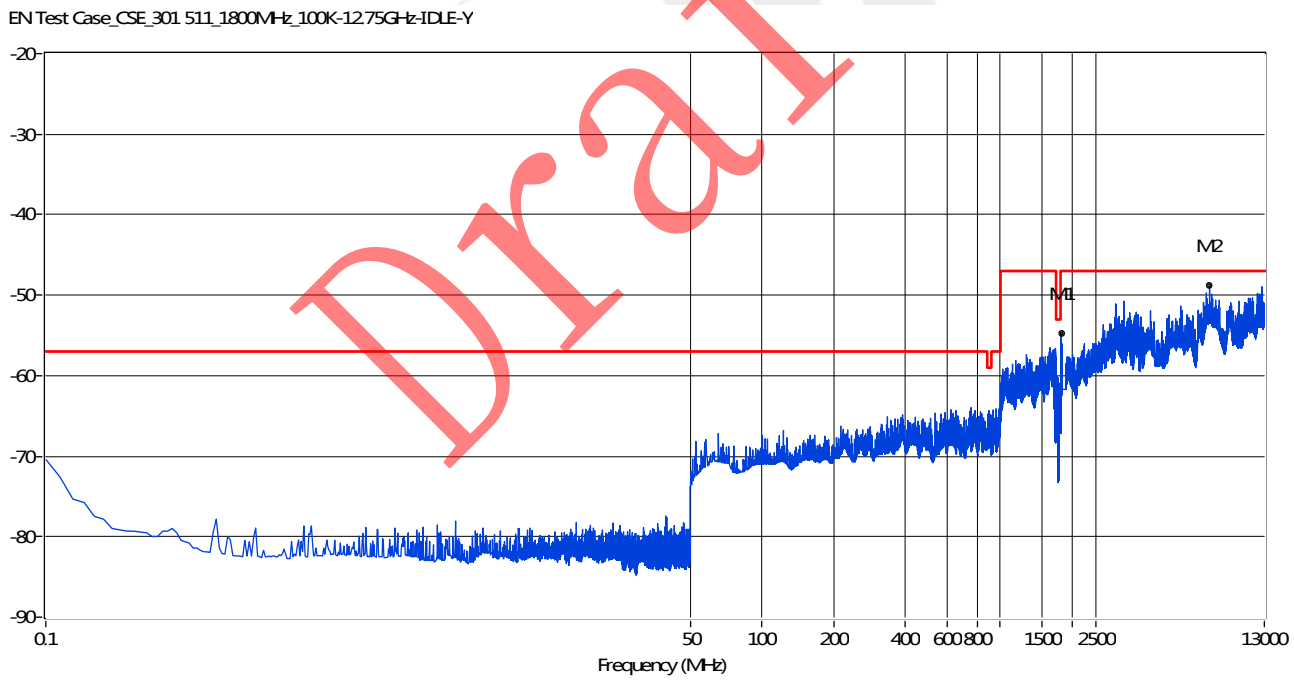

Note: the worst model have been shown in this report.

Draft

Appendix N. Radiated spurious emissions

MS allocated a channel

GSM900 Horizontal

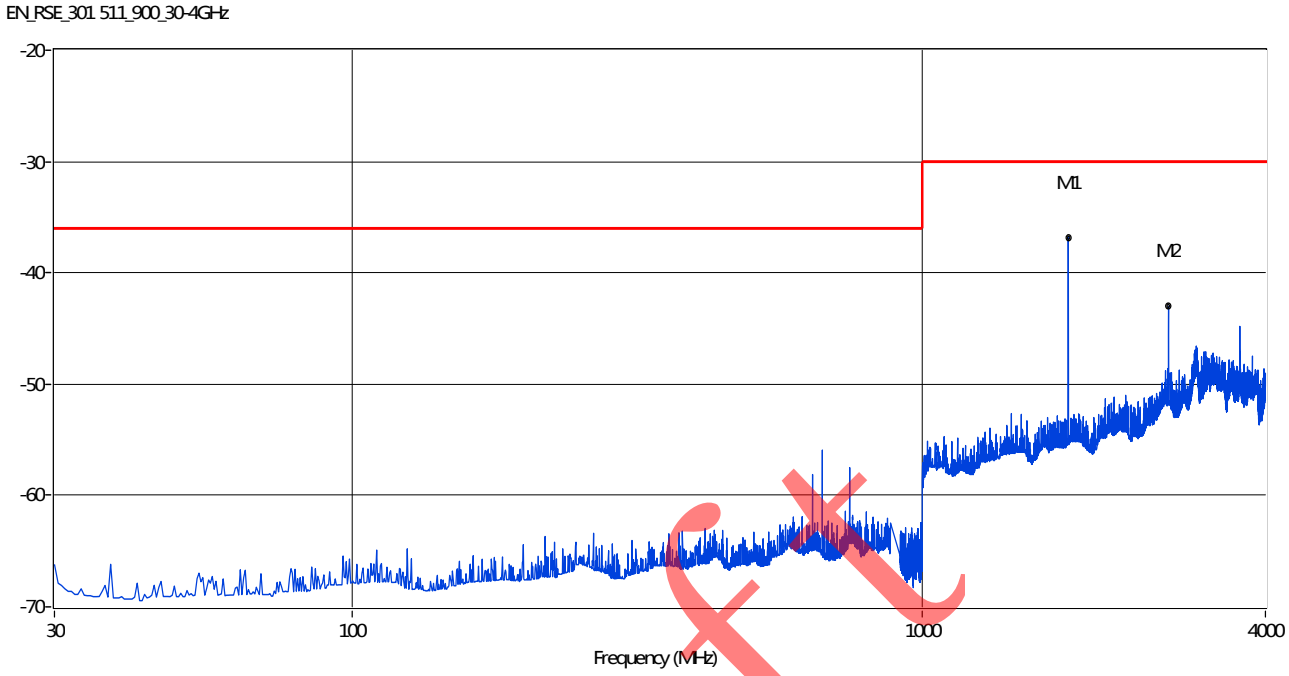

GSM900 Vertical

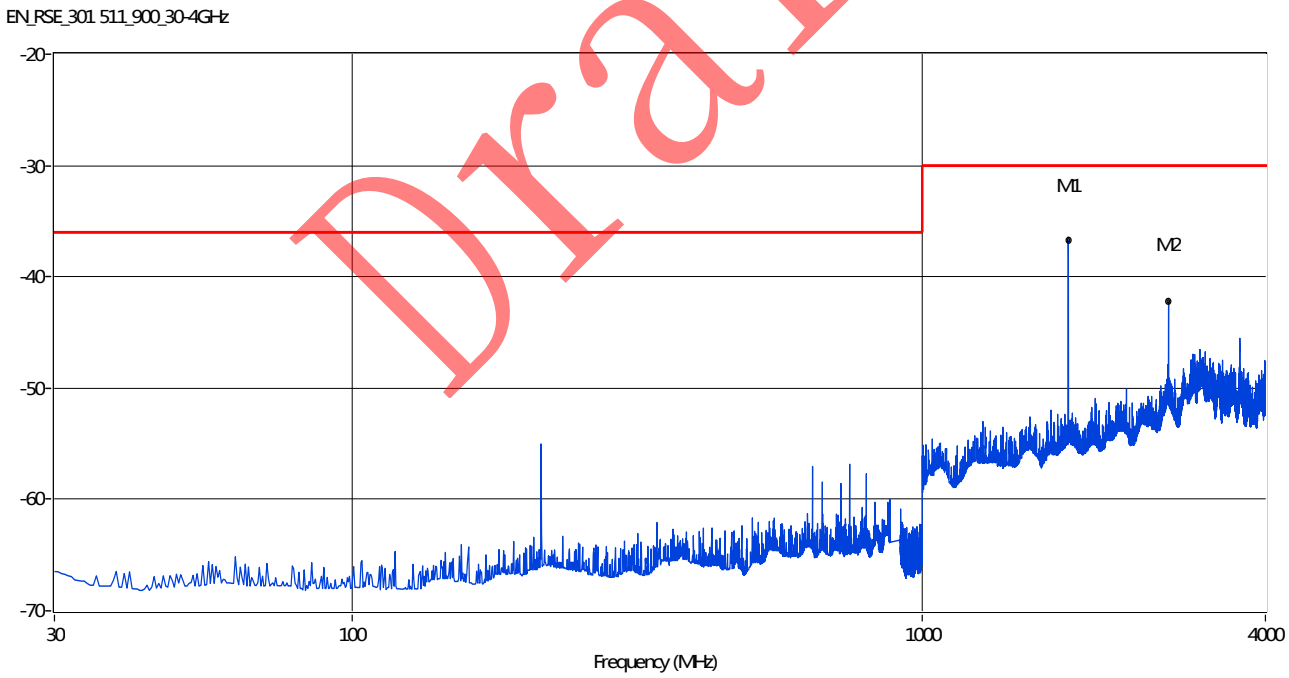

Draft

GSM1800 Horizontal

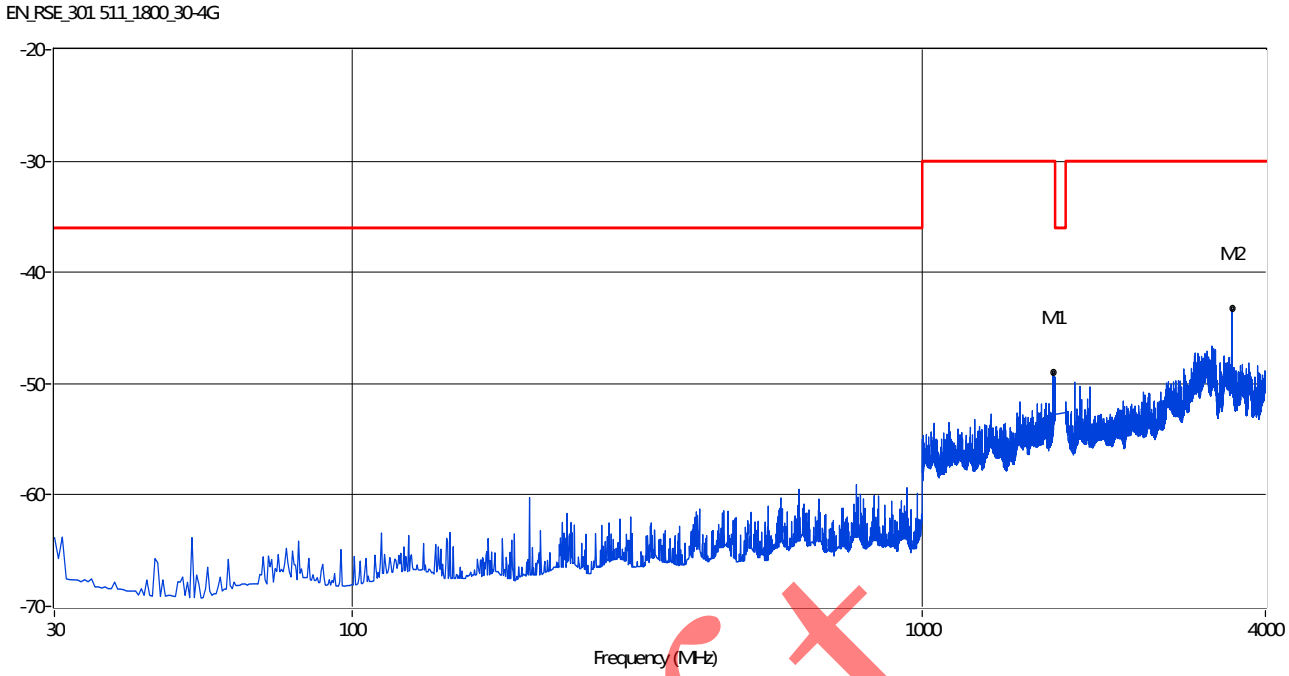

GSM1800 Vertical

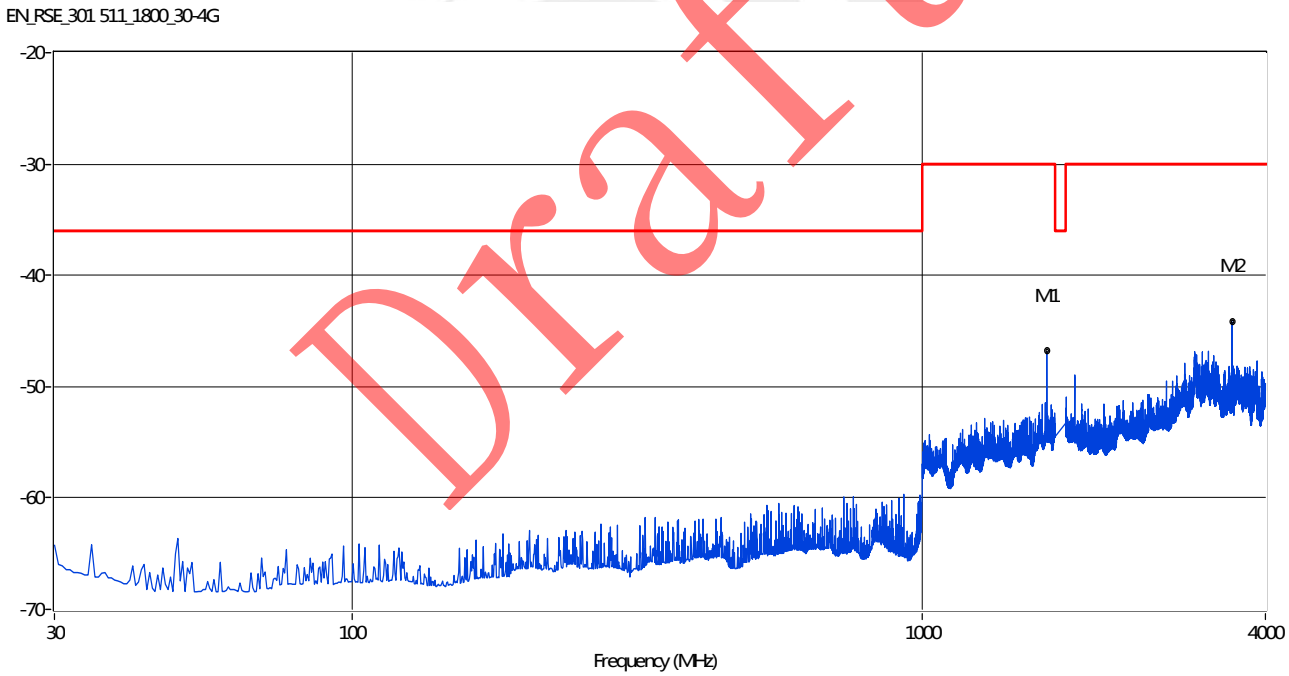

Note: The EUT is connected with the GSM base station when the BT is transmiting.

Draft

MS in idle mode

GSM900 Horizontal

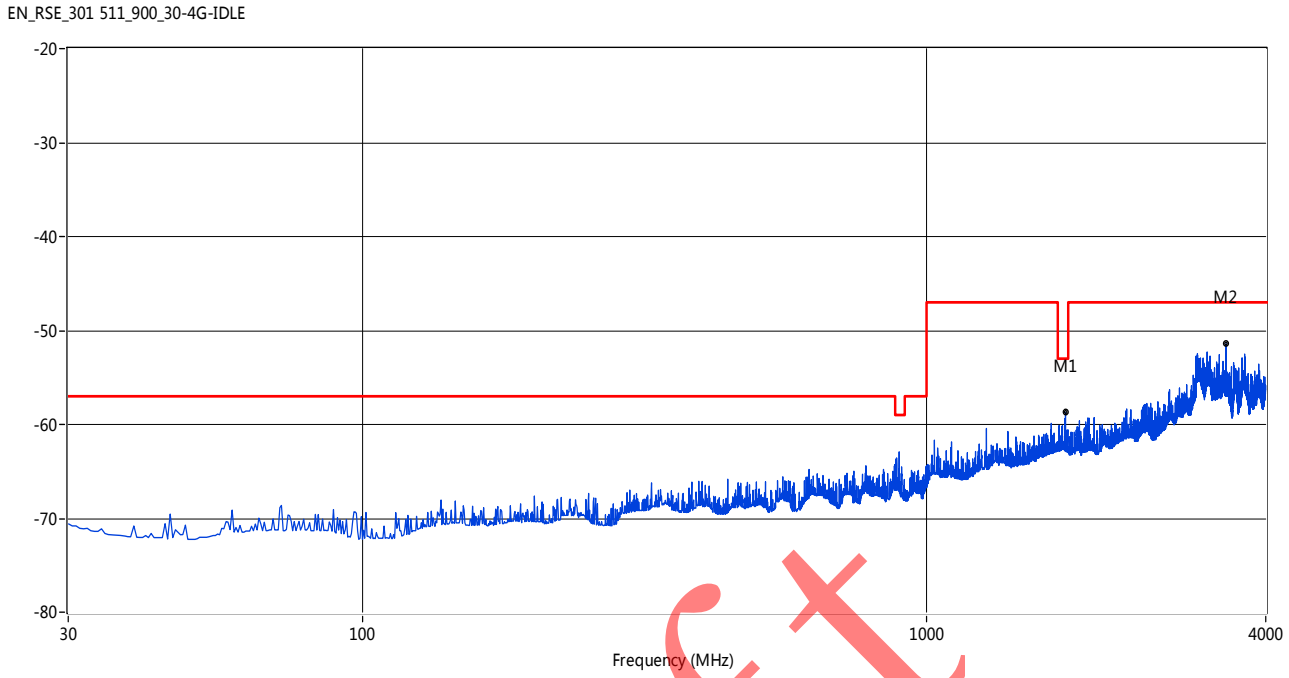

GSM900 Vertical

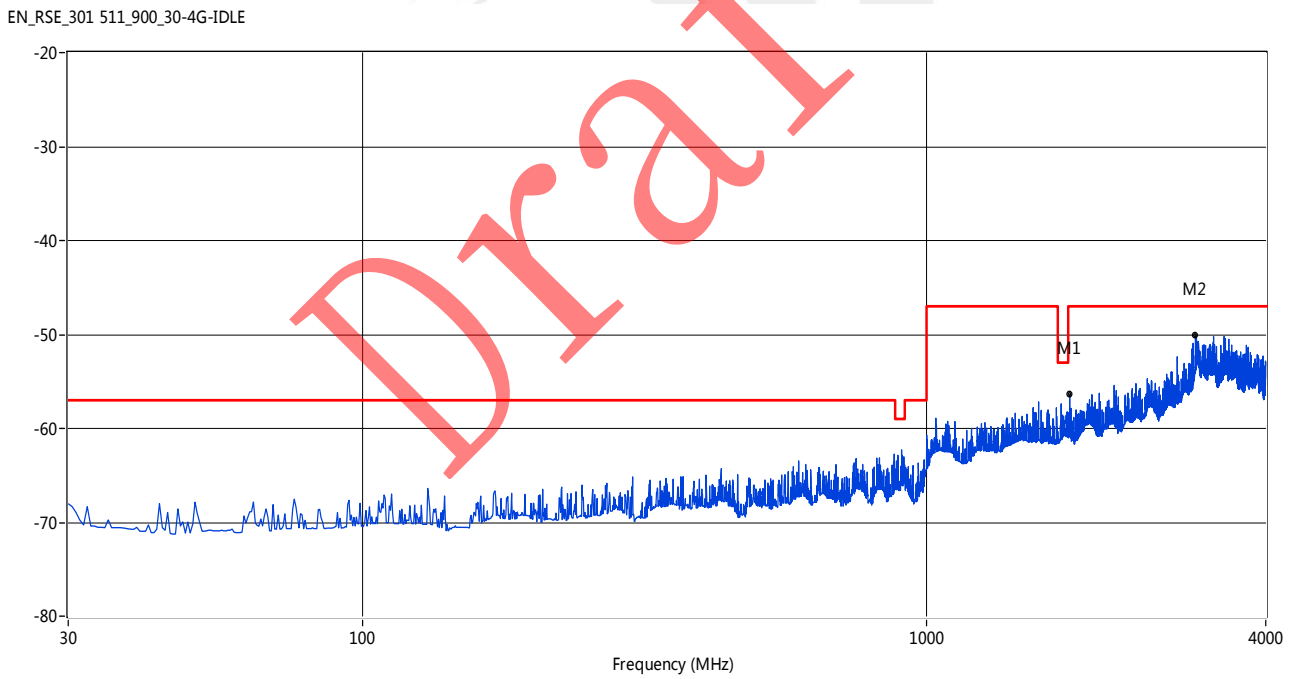

Draft

GSM1800 Horizontal

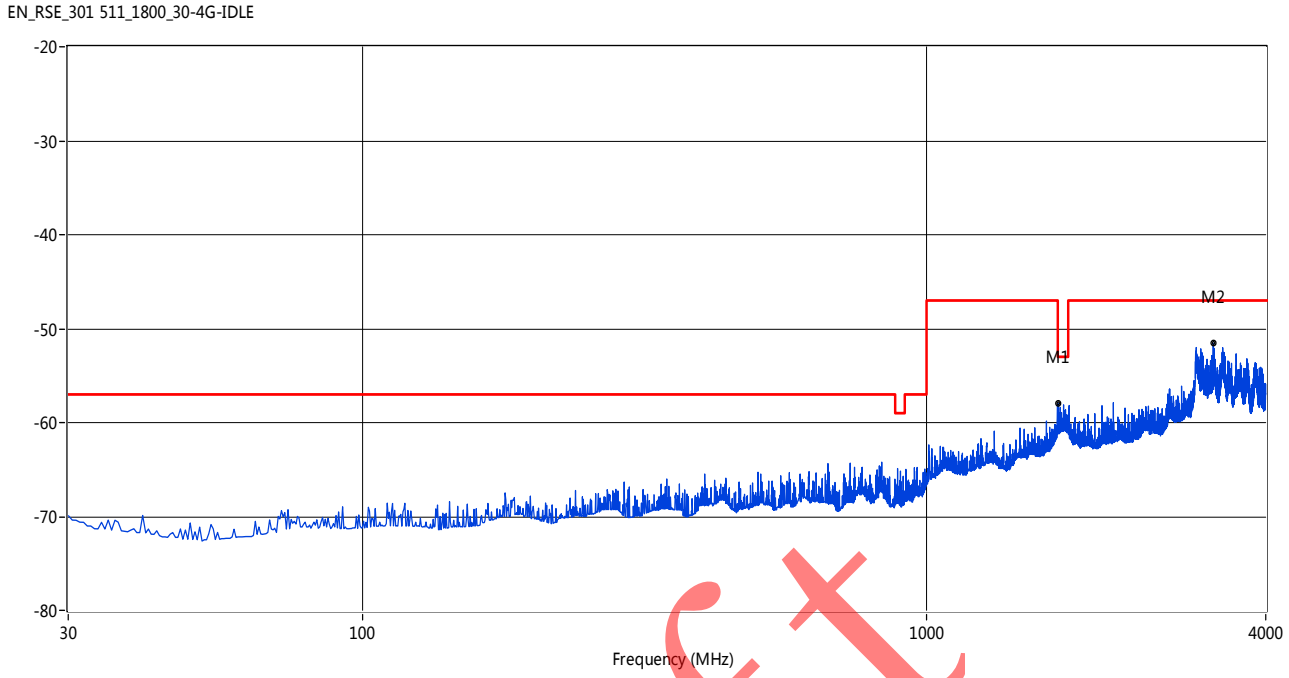

GSM1800 Vertical

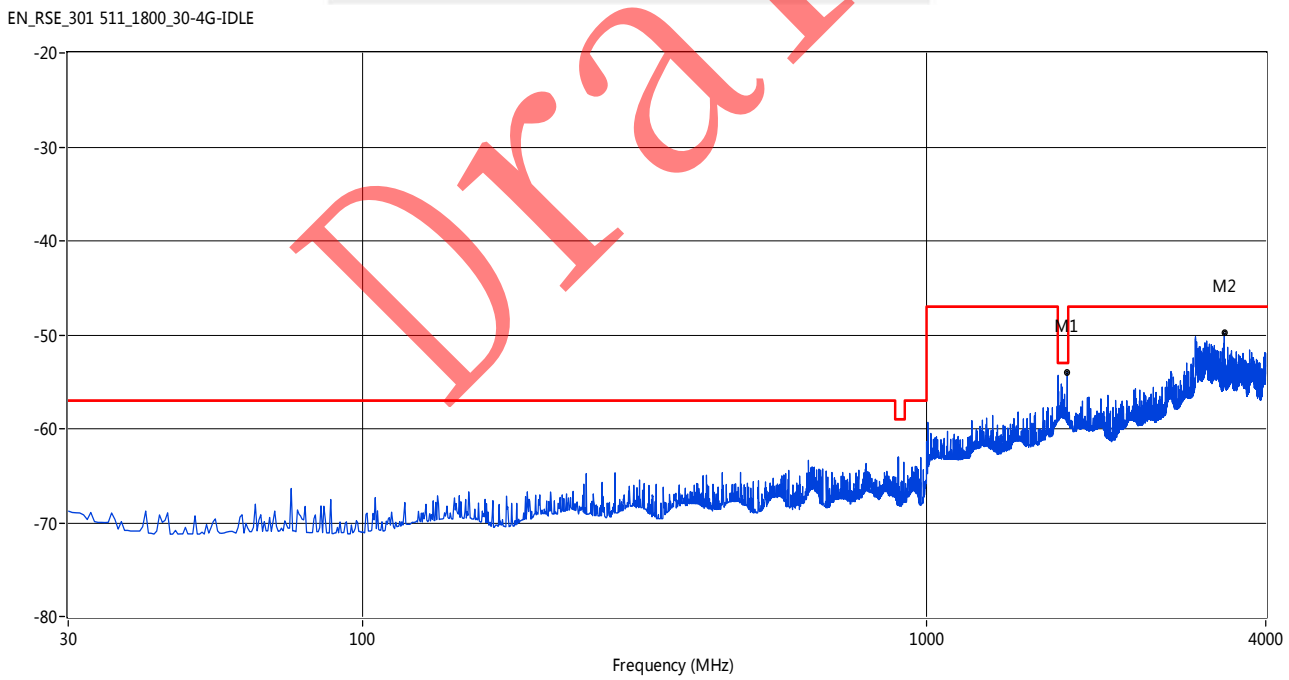

Draft

Appendix O. Receiver Blocking

GSM900

Channel(MHz)	Test condition	number of samples	RBER(%)	Limit(%)	Result
880.2	normal	10000	0.421	2.439	PASS
898.4		10000	0.416		
914.8		10000	0.776		

GPRS900

Channel(MHz)	Test condition	number of samples	RBER(%)	Limit(%)	Result
880.2	normal	10000	0.461	2.439	PASS
898.4		10000	0.589		
914.8		10000	0.741		

GSM1800

Channel(MHz)	Test condition	number of samples	RBER(%)	Limit(%)	Result
1710.2	normal	10000	0.509	2.439	PASS
1747.8		10000	0.561		
1784.8		10000	0.357		

GPRS1800

Channel(MHz)	Test condition	number of samples	RBER(%)	Limit(%)	Result
1710.2	normal	10000	0.630	2.439	PASS
1747.8		10000	0.420		
1784.8		10000	0.713		

Draft

Appendix P. AM suppression

GSM900

Channel(MHz)	Test condition	number of samples	RBER(%)	Limit(%)	Result
880.2	normal	10000	0.480	2.439	PASS
898.4		10000	0.294		
914.8		10000	0.669		

GPRS900

Channel(MHz)	Test condition	number of samples	RBER(%)	Limit(%)	Result
880.2	normal	10000	0.610	2.439	PASS
898.4		10000	0.664		
914.8		10000	0.495		

Draft

Appendix Q. Intermodulation rejection

intermodulation rejection- speech channels (GSM900)				
Channel(MHz)	conditions	No. of samples	RBER(%)	Limit(%)
898.4	Static	10000	0.363	2.439
intermodulation rejection- speech channels (GSM1800)				
Channel(MHz)	conditions	No. of samples	RBER(%)	Limit(%)
1747.8	Static	10000	0.572	2.439

Draft

Appendix R. Adjacent channel rejection

Reference sensitivity - TCH/FS(GSM900)					
Test style	Test condition	Channel (MHz)	No. of samples	Reading (%)	Limit (%)
FER	200KHz	898.4	8900	1.017	6.742
	400 kHz Interferer TUhight		8900	1.012	6.742
	400 kHz Interferer Static		8900	1.053	11.461
class Ib(RBER)	200KHz	898.4	1000000	0.134	0.42
	400 kHz Interferer TUhight		1000000	0.132	0.42
	400 kHz Interferer Static		1000000	0.156	0.756
class II(RBER)	200KHz	898.4	600000	1.352	8.333
	400 kHz Interferer TUhight		600000	1.435	8.333
	400 kHz Interferer Static		600000	1.388	9.167
α =1					

Reference sensitivity - TCH/FS(GSM1800)					
Test style	Test condition	Channel (MHz)	No. of samples	Reading (%)	Limit (%)
FER	200KHz	1747.8	17800	1.008	3.377
	400 kHz Interferer TUhight		17800	1.012	3.374
	400 kHz Interferer Static		17800	1.014	5.715
class Ib(RBER)	200KHz	1747.8	2000000	0.103	0.23
	400 kHz Interferer TUhight		2000000	0.109	0.25
	400 kHz Interferer Static		2000000	0.128	0.485
class II(RBER)	200KHz	1747.8	120000	1.251	8.337
	400 kHz Interferer TUhight		120000	1.330	8.338
	400 kHz Interferer Static		120000	0.935	9.169
α =1					

Draft

Appendix S. Reference sensitivity

Reference sensitivity - TCH/FS(GSM900)					
Test style	Test condition	Channel (MHz)	No. of samples	Reading (%)	Limit (%)
FER	TUhigh	898.4	8900	0.631	6.744
	Static		164000	0.084	0.127
class Ib(RBER)	TUhigh	898.4	1000000	0.187	0.48
	Static		20000000	0.210	0.44
class II(RBER)	TUhigh	898.4	120000	1.191	8.33
	RA		24000	0.912	7.58
	HT		60000	0.965	9.331
	Static		8200	0.501	2.432
α =1					

Reference sensitivity - TCH/FS(GSM1800)					
Test style	Test condition	Channel (MHz)	No. of samples	Reading (%)	Limit (%)
FER	TUhigh	1747.8	13400	0.658	4.475
	Static		164000	0.063	0.124
class Ib(RBER)	TUhigh	1747.8	1500000	0.187	0.37
	Static		20000000	0.214	0.43
class II(RBER)	TUhigh	1747.8	60000	1.032	8.335
	RA		24000	0.966	7.60
	HT		30000	0.947	9.336
	Static		82000	0.529	2.435
α =1					

Reference sensitivity - FACCH/FS(GSM900)					
Test style	Test condition	Channel (MHz)	No. of samples	Reading (%)	Limit (%)
FER	TUhigh	898.4	7000	1.189	8.961

Reference sensitivity - FACCH/FS(GSM1800)					
Test style	Test condition	Channel (MHz)	No. of samples	Reading (%)	Limit (%)
FER	TUhigh	1747.8	14000	0.810	4.368

Draft

Appendix T. Minimum input level for reference performance-GPRS

GPRS900					
Test style	Test condition	Channel (MHz)	Input level(dBm))	Reading (%)	Limit (%)
PDTCH/CS-1	static	898.4	-104	0.59	10
	TUhigh (no FH)		-104	0.52	
	TUhigh (ideal FH)		-104	0.50	
	RA (no FH)		-104	0.61	
	HT (no FH)		-103	0.52	
PDTCH/CS-2	static	898.4	-104	0.62	10
	TUhigh (no FH)		-100	0.48	
	TUhigh (ideal FH)		-101	0.51	
	RA (no FH)		-101	0.62	
	HT (no FH)		-99	0.51	
PDTCH/CS-3	static	898.4	-104	0.45	10
	TUhigh (no FH)		-98	0.62	
	TUhigh (ideal FH)		-99	0.48	
	RA (no FH)		-98	0.52	
	HT (no FH)		-96	0.37	
PDTCH/CS-4	static	898.4	-101	0.56	10
	TUhigh (no FH)		-90	0.42	
	TUhigh (ideal FH)		-90	0.53	

Draft

GPRS1800					
Test style	Test condition	Channel (MHz)	Input level(dBm))	Reading (%)	Limit (%)
PDTCH/CS-1	static	1747.8	-104	0.52	10
	TUhigh (no FH)		-104	0.52	
	TUhigh (ideal FH)		-104	0.56	
	RA (no FH)		-104	0.39	
	HT (no FH)		-103	0.56	
PDTCH/CS-2	static	1747.8	-104	0.51	10
	TUhigh (no FH)		-100	0.43	
	TUhigh (ideal FH)		-101	0.50	
	RA (no FH)		-101	0.50	
	HT (no FH)		-99	0.55	
PDTCH/CS-3	static	1747.8	-104	0.46	10
	TUhigh (no FH)		-98	0.43	
	TUhigh (ideal FH)		-99	0.61	
	RA (no FH)		-98	0.46	
	HT (no FH)		-94	0.39	
PDTCH/CS-4	static	1747.8	-101	0.41	10
	TUhigh (no FH)		-88	0.65	
	TUhigh (ideal FH)		-88	0.58	

※※※※※END OF THE REPORT※※※※※

Draft