STS LAB

RADIO TEST REPORT

Report No: STS1711221W02

Issued for

Vonino Electronics LTD

Unit 1109, 11/F., Kowloon Centre, 33 Ashley Road, Tsim Sha Tsui, Kowloon, Hong Kong

Product Name:	mobilephone
Brand Name:	Vonino
Test Model Name:	NONO33
Series Model:	Nono M, Nono J, Nono Q, Nono Z
Test Standard:	ETSI EN 300 328 V2.1.1 (2016-11)

TESTING CONSULTING SOLUTION CERTIFICATION APPROVAL

Shenzhen STS Test Services Co., Ltd.
1/F., Building B, Zhuoke Science Park, No.190,Chongqing Road,
Fuyong Street, Bao'an District, Shenzhen, Guangdong,China
TEL: +86-755 3688 6288 FAX: +86-755 3688 6277 E-mail:sts@stsapp.com

TEST REPORT CERTIFICATION

Applicant's name ..... : Vonino Electronics LTD

Address ..... : Unit 1109, 11/F., Kowloon Centre, 33 Ashley Road, Tsim Sha Tsui, Kowloon, Hong Kong

Manufacture's Name ..... : Hona (HK) Technology Limited

Address ..... : Room 603, 6/F, Block R2-B, No.20, Gaoxin S.Ave.7th, Southern Section, Hi-tech Industrial Park, Nanshan District, Shenzhen, China

Product description

Product name ..... : mobilephone

Trade mark ..... : Vonino

Test model name ..... : NONO33

Series model..... : Nono M, Nono J, Nono Q, Nono Z

Standards ..... : ETSI EN 300 328 V2.1.1 (2016-11)

This device described above has been tested by STS, and the test results show that the equipment under test (EUT) is in compliance with the 2014/53/EU RED Directive Art.3.2 requirements. And it is applicable only to the tested sample identified in the report.
This report shall not be reproduced except in full, without the written approval of STS, this document may be altered or revised by STS, personal only, and shall be noted in the revision of the document.

Date of Test ..... :

Date (s) of performance of tests..... : 21 Nov. 2017 ~24 Nov. 2017

Date of Issue..... : 24 Nov. 2017

Test Result..... : **Pass**

Testing Engineer : Sean She

(Sean she)

Technical Manager : Hakim. hou

(Hakim.hou)

Authorized Signatory : Vita Li

(Vita Li)

Table of Contents Page

Table of Contents **Page**

Revision History

Rev.	Issue Date	Report No.	Effect Page	Contents
00	24 Nov. 2017	STS1711221W02	ALL	Initial Issue

1. SUMMARY OF TEST RESULTS

Test procedures according to the technical standards:

ETSI EN 300 328 V2.1.1			
Test Item	Limit	Frequency Range (MHz)	Applicable (Yes/No)
TRANSMITTER PARAMETERS			
RF output power	Clause 4.3.1.2.3	2400-2483.5	Y
Duty Cycle, Tx-sequence, Tx-gap	Clause 4.3.1.3.3		N
Accumulated Transmit time, Frequency Occupation & Hopping Sequence	Clause 4.3.1.4.3		Y
Hopping Frequency Separation	Clause 4.3.1.5.3		Y
Medium Utilisation	Clause 4.3.1.6.3		N
Adaptivity(Adaptive Frequency Hopping)	Clause 4.3.1.7		N
Occupied Channel Bandwidth	Clause 4.3.1.8.3		Y
Transmitter unwanted emissions in the OOB domain	Clause 4.3.1.9.3	FL=2400-2BW FH=2483.5+2BW	Y
Transmitter unwanted emissions in the spurious domain(Conducted)	Clause 4.3.1.10.3	30-12750	N
Transmitter unwanted emissions in the spurious domain(Radiated)			Y
RECEIVER PARAMETERS			
Spurious emissions (Conducted)	Clause 4.3.1.11.3	30-12750	N
Spurious emissions (Radiated)			Y
Receiver Blocking	Clause 4.3.1.12.3	2400-2483.5	Y
Geo-location capability	Clause 4.3.1.13.3	--	N

1.1 TEST FACTORY

Shenzhen STS Test Services Co., Ltd.

Add. : 1/F., Building B, Zhuoke Science Park, No.190, Chongqing Road, Fuyong Street, Bao'an District, Shenzhen, Guangdong,China

CNAS Registration No.: L7649; FCC Registration No.: 625569

IC Registration No.: 12108A; A2LA Certificate No.: 4338.01;

1.2 MEASUREMENT UNCERTAINTY

The reported uncertainty of measurement **y** ± **U**，where expended uncertainty **U** is based on a standard uncertainty multiplied by a coverage factor of **k=2**，providing a level of confidence of approximately **95** %。

No.	Item	Uncertainty
1	RF power,conducted	±0.71dB
2	Spurious emissions,conducted	±0.63dB
3	Spurious emissions,radiated(>1G)	±2.25dB
4	Spurious emissions,radiated(<1G)	±2.21dB

2. GENERAL INFORMATION

2.1 GENERAL DESCRIPTION OF EUT

<table>
<tr><td>Equipment</td><td>mobilephone</td></tr>
<tr><td>Brand Name</td><td>Vonino</td></tr>
<tr><td>Model Name</td><td>NONO33</td></tr>
<tr><td>Series Model</td><td>Nono M, Nono J, Nono Q, Nono Z</td></tr>
<tr><td>Model Difference</td><td>Only different in model name,appearance and colors</td></tr>
<tr><td>Product Description</td><td>The EUT is mobilephone
<table>
<tr><td>Operation Frequency</td><td>2402~2480 MHz</td></tr>
<tr><td>Modulation Type</td><td>BT(1Mbps): GFSK</td></tr>
<tr><td>Number Of Channel</td><td>79CH</td></tr>
<tr><td>Bit Rate of Transmitter</td><td>1Mbps</td></tr>
<tr><td>Antenna Designation</td><td>Monopole Antenna</td></tr>
<tr><td>Antenna Gain(Peak)</td><td>0.5 dBi</td></tr>
<tr><td>Power Rating</td><td>DC 3.7V by battery</td></tr>
</table>
Based on the application, features, or specification exhibited in User's Manual, the EUT is considered as an ITE/Computing Device. More details of EUT technical specification, please refer to the User's Manual.</td></tr>
<tr><td>Channel List</td><td>Refer to below</td></tr>
<tr><td>Power Adapter</td><td>Power supply and ADP(rating):
Input: AC 100V-240V, 50/60Hz, 200mA
Output: DC 5V, 500mA</td></tr>
<tr><td>Battery</td><td>Battery(rating):
Rated Voltage: 3.7V
Charge Limit: 4.2V
Capacity: 800mAh</td></tr>
<tr><td>Hardware version number</td><td>H668M10-C10</td></tr>
<tr><td>Software version number</td><td>Nono_33_6531E_QQVGA_V07_20171110</td></tr>
</table>

Note:
1.For a more detailed features description, please refer to the manufacturer’s specifications or the User's Manual.

2.

Channel	Frequency (MHz)
00	2402
01	2403
02	2404
……	…….
39	2441
40	2442
41	2443
……	…….
77	2479
78	2480

a) The type of modulation used by the equipment:
■FHSS
□other forms of modulation

b) In case of FHSS modulation:
•In case of non-Adaptive Frequency Hopping equipment:
The number of Hopping Frequencies:
•In case of Adaptive Frequency Hopping Equipment:
The maximum number of Hopping Frequencies: 79
The minimum number of Hopping Frequencies: 79
The (average) Dwell Time:

c) Adaptive / non-adaptive equipment:
□non-adaptive Equipment
■adaptive Equipment without the possibility to switch to a non-adaptive mode
□adaptive Equipment which can also operate in a non-adaptive mode

d) In case of adaptive equipment:
The Channel Occupancy Time implemented by the equipment:
□The equipment has implemented an LBT based DAA mechanism
• In case of equipment using modulation different from FHSS:
□The equipment is Frame Based equipment
□The equipment is Load Based equipment
■The equipment can switch dynamically between Frame Based and Load Based equipment
The CCA time implemented by the equipment: ..... μs
The value q as referred to in clause 4.3.2.5.2.2.2 .....
□The equipment has implemented an non-LBT based DAA mechanism
□The equipment can operate in more than one adaptive mode

e) In case of non-adaptive Equipment:
The maximum RF Output Power (e.i.r.p.): …….dBm
The maximum (corresponding) Duty Cycle:……..%
Equipment with dynamic behaviour, that behaviour is described here. (e.g. the different combinations of duty cycle and corresponding power levels to be declared):

f) The worst case operational mode for each of the following tests:
• RF Output Power
GFSK
• Accumulated Transmit Time,Frequency Occupation & Hopping Sequence
• GFSK

Hopping Frequency Separation (only for FHSS equipment)
GFSK
- Occupied Channel Bandwidth
  GFSK
- Transmitter unwanted emissions in the OOB domain
  GFSK
- Transmitter unwanted emissions in the spurious domain
  GFSK
- Receiver spurious emissions
  GFSK
- Receiver Blocking
  GFSK

g) The different transmit operating modes (tick all that apply):

■Operating mode 1: Single Antenna Equipment
■Equipment with only 1 antenna
□Equipment with 2 diversity antennas but only 1 antenna active at any moment in time
□Smart Antenna Systems with 2 or more antennas, but operating in a (legacy) mode where only 1 antenna is used. (BT mode in smart antenna systems)
□Operating mode 2: Smart Antenna Systems - Multiple Antennas without beam forming
□Single spatial stream / Standard throughput / (BT mode)
□High Throughput (> 1 spatial stream) using Occupied Channel Bandwidth 1
□High Throughput (> 1 spatial stream) using Occupied Channel Bandwidth 2
NOTE: Add more lines if more channel bandwidths are supported.
□Operating mode 3: Smart Antenna Systems - Multiple Antennas with beam forming
□Single spatial stream / Standard throughput (BT mode)
□High Throughput (> 1 spatial stream) using Occupied Channel Bandwidth 1
□High Throughput (> 1 spatial stream) using Occupied Channel Bandwidth 2
NOTE: Add more lines if more channel bandwidths are supported.

h) In case of Smart Antenna Systems:

- The number of Receive chains: .....
- The number of Transmit chains: .....

□symmetrical power distribution
□asymmetrical power distribution
In case of beam forming, the maximum beam forming gain: .....
NOTE: Beam forming gain does not include the basic gain of a single antenna.

i) Operating Frequency Range(s) of the equipment:

- Operating Frequency Range 1: 2402 MHz to 2480 MHz
- Operating Frequency Range 2:

NOTE: Add more lines if more Frequency Ranges are supported.

j) Occupied Channel Bandwidth(s):

Occupied Channel Bandwidth : 0.811MHz
Occupied Channel Bandwidth : 0.834MHz
NOTE: Add more lines if more channel bandwidths are supported.

k) Type of Equipment (stand-alone, combined, plug-in radio device, etc.):

■Stand-alone
□Combined Equipment (Equipment where the radio part is fully integrated within another type of equipment)
□Plug-in radio device (Equipment intended for a variety of host systems)
Other .....

l) The extreme operating conditions that apply to the equipment:
Operating temperature range: -10° C to 40° C
Operating voltage range: 3.4V to 4.2V ■DC
□Details provided are for the:
■stand-alone equipment
□combined (or host) equipment
□test jig

m) The intended combination(s) of the radio equipment power settings and one or more antenna assemblies and their corresponding e.i.r.p levels:
• Antenna Type
■Monopole Antenna
Antenna Gain: 0.5 dBi
If applicable, additional beamforming gain (excluding basic antenna gain): ..... dB
□Temporary RF connector provided
□No temporary RF connector provided
□Dedicated Antennas (equipment with antenna connector)
□Single power level with corresponding antenna(s)
□Multiple power settings and corresponding antenna(s)
Number of different Power Levels: .....
Power Level 1: ..... dBm
Power Level 2: ..... dBm
Power Level 3: ..... dBm
NOTE 1: Add more lines in case the equipment has more power levels.
NOTE 2: These power levels are conducted power levels (at antenna connector).
• For each of the Power Levels, provide the intended antenna assemblies, their,corresponding gains (G) and the resulting e.i.r.p. levels also taking into account the beamforming gain (Y) if applicable

Power Level 1: ..... dBm
Number of antenna assemblies provided for this power level: .....

Assembly #	Gain (dBi)	e.i.r.p.(dBm)	Part number or model name
1	0.5	5.96	NONO33
2			
3			
4			

NOTE: Add more rows in case more antenna assemblies are supported for this power level.

Power Level 2: ..... dBm
Number of antenna assemblies provided for this power level: .....

Assembly #	Gain (dBi)	e.i.r.p.(dBm)	Part number or model name
1			
2			
3			
4			

NOTE: Add more rows in case more antenna assemblies are supported for this power level.

Power Level 3: ..... dBm
Number of antenna assemblies provided for this power level: .....

Assembly #	Gain (dBi)	e.i.r.p.(dBm)	Part number or model name
1			
2			
3			
4			

NOTE: Add more rows in case more antenna assemblies are supported for this power level.

n) The nominal voltages of the stand-alone radio equipment or the nominal voltages of the combined (host) equipment or test jig in case of plug-in devices:
Details provided are for the: ■stand-alone equipment
□combined (or host) equipment
□test jig Supply Voltage
□AC mains State AC voltage 100-240 V
■ DC State DC voltage :3.7V
In case of DC, indicate the type of power source
□Internal Power Supply
□External Power Supply or AC/DC adapter
■Battery: 3.7V
□Other: .....

o) Describe the test modes available which can facilitate testing:
The EUT can entering Engineering Command by enter#*8378#1#

p) The equipment type (e.g. Bluetooth®, IEEE 802.11™ [i.3], proprietary, etc.):
BT

q) If applicable, the statistical analysis referred to in clause 5.4.1 q)
(to be provided as separate attachment)

r) If applicable, the statistical analysis referred to in clause 5.4.1 r)
(to be provided as separate attachment)

s) Geo-location capability supported by the equipment:
□ Yes
□The geographical location determined by the equipment as defined in clause 4.3.1.13.2 or clause 4.3.2.12.2 is not accessible to the user
■ No

t) Describe the minimum performance criteria that apply to the equipment (see clause 4.3.1.12.3 orclause 4.3.2.11.3):

2.2 TEST CONDITIONS AND CHANNEL

	Normal Test Conditions	Extreme Test Conditions
Temperature	15°C - 35°C	-10°C – 40°C
Relative Humidity	20% - 75%	N/A
Supply Voltage	DC 3.7V	DC 3.4V – DC 4.2V

Test Channel	EUT Channel	Test Frequency (MHz)
lowest	CH00	2402
middle	CH39	2441
highest	CH78	2480

Note:

(1) The HT 40°C and LT -10°C was declare by manufacturer, The EUT couldn't be operate normally with higher or lower temperature.

(2) The High Voltage 4.2 V and Low Voltage 3.4V was declare by manufacturer, The EUT couldn't be operate normally with higher or lower voltage.

2.3 DESCRIPTION OF TEST CONDITIONS

The EUT has been tested as an independent unit together with other necessary accessories or support units. The following support units or accessories were used to form a representative test configuration during the tests.

E-1
EUT

The EUT was programmed to be in continuously transmitting mode.

2.4 DESCRIPTION OF SUPPORT UNITS

The EUT has been tested as an independent unit together with other necessary accessories or support units. The following support units or accessories were used to form a representative test configuration during the tests.

Item	Equipment	Mfr/Brand	Model/Type No.	Serial No.	Note

Item	Shielded Type	Ferrite Core	Length	Note
N/A	N/A	N/A	N/A	N/A

Note:

(1) The support equipment was authorized by Declaration of Confirmation.

(2) For detachable type I/O cable should be specified the length in cm in 『Length』 column.

2.5 EQUIPMENTS LIST FOR ALL TEST ITEMS

Kind of Equipment	Manufacturer	Type No.	Serial No.	Last calibration	Calibrated until
Bilog Antenna	TESEQ	CBL6111D	34678	2017.03.24	2018.03.23
Horn Antenna	Schwarzbeck	BBHA 9120D (1201)	9120D-1343	2017.03.06	2018.03.05
USB RF power sensor	DARE	RPR3006W	15I00041SNO03	2017.10.15	2018.10.14
Pre-mplifier (0.1M-3GHz)	EM	EM330	60538	2017.03.12	2018.03.11
PreAmplifier (1G-26.5GHz)	Agilent	8449B	60538	2017.10.15	2018.10.14
Temperature& Humidity test chamber	GZGONGWEN	GDS-250	080821	2017.10.15	2018.10.14
Signal Generator	Agilent	N5182A	MY46240556	2017.10.15	2018.10.14
Signal Analyzer	Agilent	N9020A	MY49100060	2017.03.11	2018.03.10
Universal Radio communication tester	R&S	CMU200	11764	2017.10.15	2018.10.14
Attenuator	HP	8494B	DC-18G	2017.10.15	2018.10.14
programmable power supply	Agilent	3642A	STS-S095	N.C.R	N.C.R
AC Power Source	APC	KDF-11010G	F214050035	N.C.R	N.C.R
trun table	EM	SC100_1	60531	N/A	N/A
Antnna mast	EM	SC100	N/A	N/A	N/A
Router	TP-LINK	TL-WR885N	1125074010735	N.C.R	N.C.R

3. RF OUTPUT POWER

3.1 APPLIED PROCEDURES / LIMIT

FHSS:
The maximum RF output power for adaptive Frequency Hopping equipment shall be equal to or less than 20 dBm.The maximum RF output power for non-adaptive Frequency Hopping equipment shall be declared by the manufacturer.See clause 5.4.1 m). The maximum RF output power for this equipment shall be equal to or less than the value declared by the manufacturer. This declared value shall be equal to or less than 20 dBm.
Other than FHSS:
For adaptive equipment using wide band modulations other than FHSS, the maximum RF output power shall be 20 dBm.The maximum RF output power for non-adaptive equipment shall be declared by the supplier and shall not exceed 20 dBm. See clause 5.4.1 m). For non-adaptive equipment using wide band modulations other than FHSS, the maximum RF output power shall be equal to or less than the value declared by the supplier.
This limit shall apply for any combination of power level and intended antenna assembly.

Limit
20 dBm

Between the start and stop times of each individual burst calculate the RMS power over the burst using the formula below. Save these P_{burst} values, as well as the start and stop times for each burst.

$$P_{burst} = \frac{1}{k}\sum_{n=1}^{k} P_{sample}(n)$$

with 'k' being the total number of samples and 'n' the actual sample number

3.2 TEST PROCEDURES

1. Please refer to ETSI EN 300 328 (V2.1.1) clause 5.4.2.1 for the test conditions.
2. Please refer to ETSI EN 300 328 (V2.1.1) clause 5.4.2.2 for the measurement method.

a) Use a fast power sensor suitable for 2,4 GHz and capable of 1 MS/s.
Use the following settings:
- Sample speed 1 MS/s or faster.
- The samples must represent the power of the signal.
- Measurement duration: For non-adaptive equipment: equal to the observation period defined in b)

b) clause 4.3.1.3.2 or clause 4.3.2.4.2. For adaptive equipment, the measurement duration shall be long enough to ensure a minimum number of bursts (at least 10) is captured

c) Print the plots from power sensor by used power sensor on PC, select the max result and record it.

3.3 TEST SETUP LAYOUT

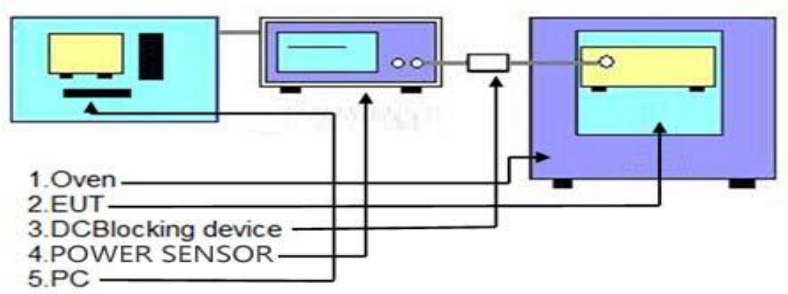

3.4 TEST RESULT

Modulation		GFSK				
Test conditions		Normal	Extreme			
			LTLV	LTHV	HTLV	HTHV
EIRP (dBm)	Hopping	5.94	5.93	5.96	5.90	5.93
	Max. output power	5.96				
Limits		20dBm (-10dBW)				
Burst plot		> 10				
T/on		0.25ms				
T/Off		1ms				
Result		**Complies**				

Note: Average EIRP Power = power sensor + the antenna gain value

GFSK HOPPING

4. ACCUMULATED TRANSMIT TIME,FREQUENCY OCCUPATION & HOPPING SEQUENCE

4.1 APPLIED PROCEDURES / LIMIT

Non-adaptive frequency hopping systems

The Accumulated Transmit Time on any hopping frequency shall not be greater than 15 ms within any observation period of 15 ms multiplied by the minimum number of hopping frequencies (N) that have to be used.

Non-adaptive medical devices requiring reverse compatibility with other medical devices placed on the market that are compliant with version 2.0.2 or earlier versions of ETSI EN 300 328, are allowed to have an operating mode in which the maximum Accumulated Transmit Time is 400 ms within any observation period of 400 ms multiplied by the minimum number of hopping frequencies (N) that have to be used, only when communicating to these legacy devices

already placed on the market. In order for the equipment to comply with the Frequency Occupation requirement, it shall meet either of the following two options:

Option 1: Each hopping frequency of the hopping sequence shall be occupied at least once within a period not exceeding four times the product of the dwell time and the number of hopping frequencies in use.

Option 2: The occupation probability for each frequency shall be between ((1 / U) × 25 %) and 77 % where U is the number of hopping frequencies in use.

The hopping sequence(s) shall contain at least N hopping frequencies where N is 15 or 15 divided by the minimum Hopping Frequency Separation in MHz, whichever is the greater.

Adaptive frequency hopping equipment

Adaptive Frequency Hopping equipment shall be capable of operating over a minimum of 70 % of the band specified in clause 1.

The Accumulated Transmit Time on any hopping frequency shall not be greater than 400 ms within any observation period of 400 ms multiplied by the minimum number of hopping frequencies (N) that have to be used.In order for the equipment to comply with the Frequency Occupation requirement, it shall meet either of the following two options:

Option 1: Each hopping frequency of the hopping sequence shall be occupied at least once within a period not exceeding four times the product of the dwell time and the number of hopping frequencies in use.

Option 2: The occupation probability for each frequency shall be between ((1 / U) × 25 %) and 77 % where U is the number of hopping frequencies in use.

The hopping sequence(s) shall contain at least N hopping frequencies at all times, where N is 15 or 15 divided by the minimum Hopping Frequency Separation in MHz, whichever is the greater.

Other Requirements
For non-Adaptive Frequency Hopping equipment, from the N hopping frequencies defined in clause 4.3.1.4.3.1 above,the equipment shall transmit on at least one hopping frequency while other hopping frequencies are blacklisted.For equipment that blacklists one or more hopping frequencies, these blacklisted frequencies are considered as active transmitting for the calculation of the MU factor of the equipment. See also clause 5.4.2.2.1.3 step 4, second bullet item and clause 5.4.2.2.1.4 step 3, note 2.For Adaptive Frequency Hopping equipment, from the N hopping frequencies defined in clause 4.3.1.4.3.2 above, the equipment shall consider at least one hopping frequency for its transmissions. Providing that there is no interference present on this frequency with a level above the detection threshold defined in clause 4.3.1.7.2.2 point 5 or clause 4.3.1.7.3.2 point 5, then the equipment shall have transmissions on this frequency.For non-Adaptive Frequency Hopping equipment, when not transmitting on a hopping frequency, the equipment has to occupy that frequency for the duration of the typical dwell time (see also definition for blacklisted frequency in clause 3.1).
For Adaptive Frequency Hopping equipment using LBT based DAA, if a signal is detected during the CCA, the equipment may jump immediately to the next frequency in the hopping sequence (see clause 4.3.1.7.2.2 point 2)
provided the limit for maximum dwell is respected.

4.2 TEST PROCEDURE

1. Please refer to ETSI EN 300 328 (V2.1.1) clause 5.4.4.1 for the test conditions.
2. Please refer to ETSI EN 300 328 (V2.1.1) clause 5.4.4.2 for the measurement method.

a) Set EUT work in hopping mode;

b) Centre Frequency: Equal to the hopping frequency being investigated

c) Frequency Span: 0 Hz

d) RBW: ~ 50 % of the Occupied Channel Bandwidth (417K for 1M)

e) VBW: ≥ RBW (417KHz for 1M)

f) Detector Mode: RMS

g) Sweep time: Equal to the applicable observation period (see clause 4.3.1.4.3.1 or clause 4.3.1.4.3.2)

h) Number of sweep points: 30000

j) Trace mode: Clear / Write

k) Trigger: Free Run

4.3 TEST SETUP

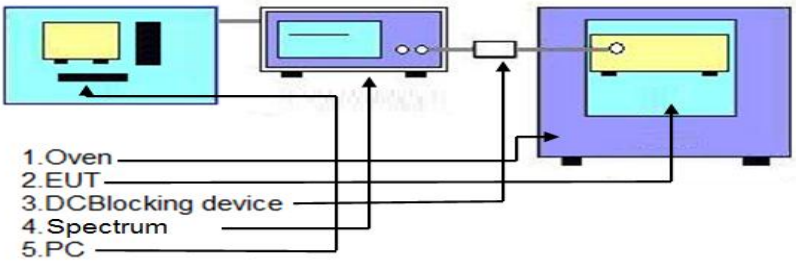

4.4 TEST RESULT

GFSK

Dwell Time: N/A for Modulation Technology other than FHSS

Data Packet	Frequency	Pulse Duration	Dwell Time	Limits
		(ms)	(s)	(ms)
DH1	2441	0.370	0.118	400
DH3	2441	1.630	0.261	400
DH5	2441	2.880	0.307	400

Minimum Frequency Occupation Time Result:

N/A for Modulation Technology other than FHSS

Mode	Channel	Minimum Frequency occupation Time(ms)	Limit
DH1	2441	346.33	>4 × DT × 79
DH3	2441	1197.71	>4 × DT × 79
DH5	2441	2389.47	>4 × DT × 79

Note: Sweep time: 4 × Dwell Time × Actual number of hopping frequencies in use

Hopping sequence: N/A for Modulation Technology other than FHSS

20dB BW(MHz)	Limit	
79.60		
Hopping Sequence(%)	Hopping Sequence >70%	Hopping Channel >15
95.32%		

Remark:

1. For adaptive systems, using the lowest and highest -20 dB points from the total spectrum envelope, it shall be verified whether the system uses 70 % of the band specified.
2. Hopping Sequence(%) = (20dB BW/83.5)*100

Test Plot

GFSK

DH1

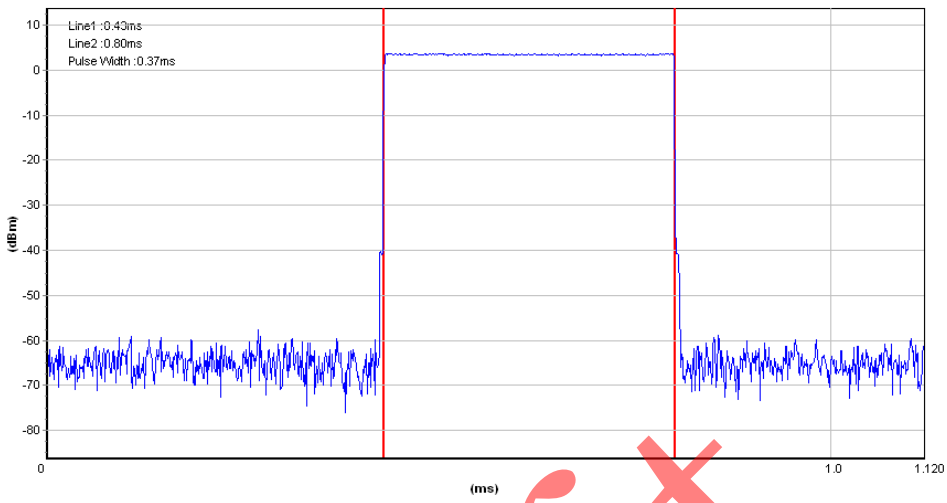

DH3

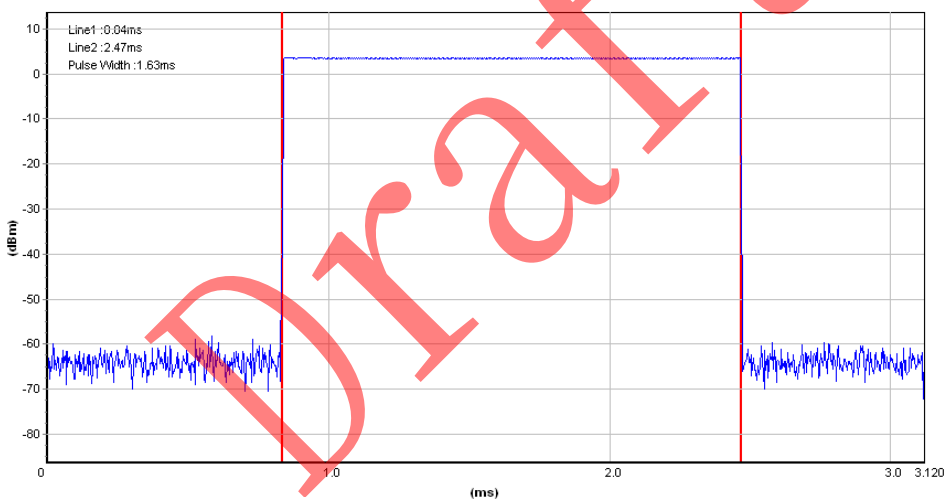

DH5

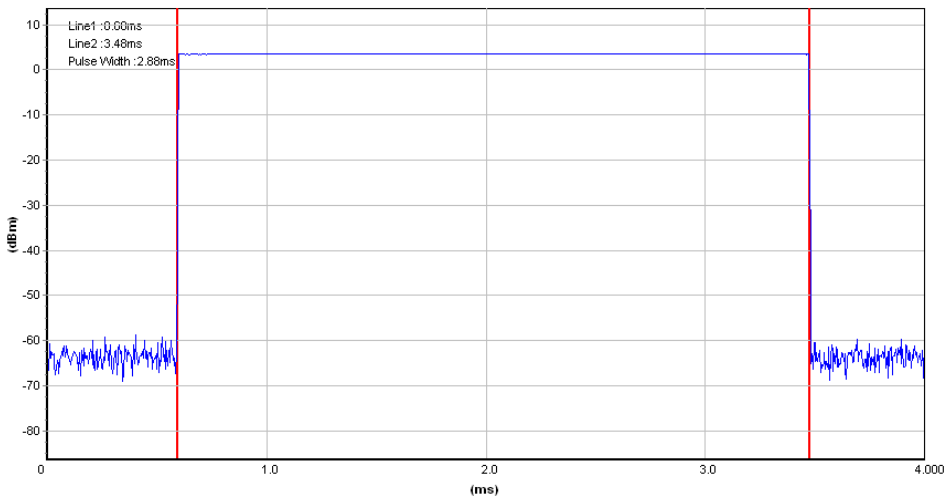

5. HOPPING FREQUENCY SEPARATION

5.1 APPLIED PROCEDURES / LIMIT

a. Non-adaptive frequency hopping systems

For non-adaptive Frequency Hopping equipment, the Hopping Frequency Separation shall be equal to or greater than the Occupied Channel Bandwidth (see clause 4.3.1.8), with a minimum separation of 100 kHz.

For equipment with a maximum declared RF Output power level of less than 10 dBm e.i.r.p. or for non-adaptive Frequency Hopping equipment operating in a mode where the RF Output power is less than 10 dBm e.i.r.p. only the minimum Hopping Frequency Separation of 100 kHz applies.

b. Adaptive frequency hopping systems

For adaptive Frequency Hopping equipment, the minimum Hopping Frequency Separation shall be 100 kHz.

Adaptive Frequency Hopping equipment that switched to a non-adaptive mode for one or more hopping frequencies because interference was detected on these hopping frequencies with a level above the threshold level defined in clause 4.3.1.7.2.2, point 5 or clause 4.3.1.7.3.2, point 5, is allowed to continue to operate with a minimum Hopping Frequency Separation of 100 kHz as long as the interference remains present on these hopping frequencies. The equipment shall continue to operate in an adaptive mode on other hopping frequencies.

Adaptive Frequency Hopping equipment which decided to operate in a non-adaptive mode on one or more hopping frequencies without the presence of interference, shall comply with the limit in clause 4.3.1.5.3.1 for these hopping frequencies as well as with all other requirements applicable to non-adaptive frequency hopping equipment.

5.2 TEST PROCEDURE

a. Please refer to ETSI EN 300 328 (V2.1.1) clause 5.4.5.1 for the test conditions.

b. Please refer to ETSI EN 300 328 (V2.1.1) clause 5.4.5.2 for the measurement method.

- Centre Frequency: Centre of the two adjacent hopping frequencies
- Frequency Span: Sufficient to see the complete power envelope of both hopping frequencies
- RBW: 1 % of the Span
- RBW: 30K
  VBW:100K
- Detector Mode: RMS
- Trace Mode: Max Hold
- Sweep time: 1S

5.3 TEST SETUP

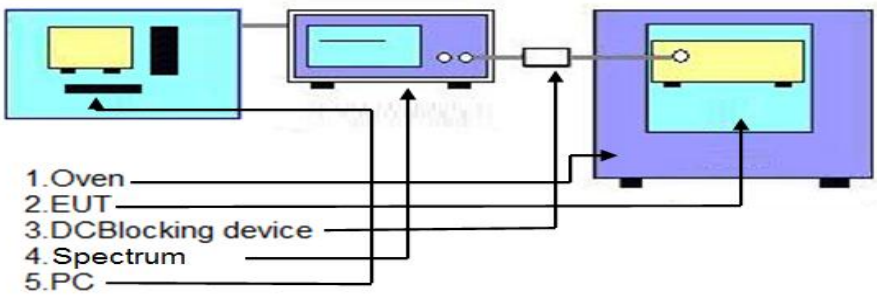

5.4 TEST RESULT

GFSK

Frequency	Ch. Separation (KHz)	Limit (kHz)	Result
2402.000MHz	1055	>100	**Complies**
2441.000MHz	1055	>100	**Complies**
2480.000 MHz	1055	>100	**Complies**

Min Separation

6. OCCUPIED CHANNEL BANDWIDTH

6.1 APPLIED PROCEDURES / LIMIT

The Occupied Channel Bandwidth for each hopping frequency shall fall completely within the band given in table 1.
For non-adaptive Frequency Hopping equipment with e.i.r.p. greater than 10 dBm, the Occupied Channel Bandwidth for every occupied hopping frequency shall be equal to or less than the Nominal Channel Bandwidth declared by the manufacturer. See clause 5.4.1 j). This declared value shall not be greater than 5 MHz.

6.2 TEST PROCEDURES

1. Please refer to ETSI EN 300 328 (V2.1.1) clause 5.4.7.1 for the test conditions.
2. Please refer to ETSI EN 300 328 (V2.1.1) clause 5.4.7.2 for the measurement method.

-- Centre Frequency: The centre frequency of the channel under test

-- Resolution BW: ~ 1 % of the span without going below 1 %

--RBW: 30K

VBW: 100K

--Frequency Span for frequency hopping equipment: Lowest frequency separation that is used within the hopping sequence)

--Frequency Span for other types of equipment: 2 × Nominal Channel Bandwidth (e.g. 2 MHz for a 1 MHz channel)

-- Detector Mode: RMS

--Trace Mode: Max Hold

--Sweep time:1S

6.3 TEST SETUP LAYOUT

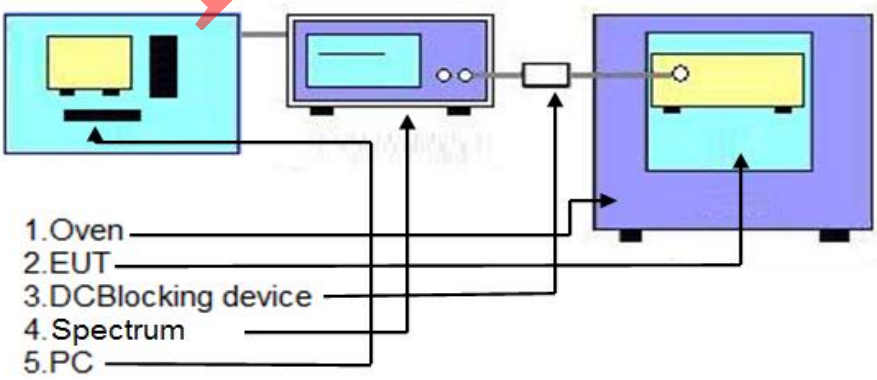

6.4 TEST RESULT

OCCUPIED CHANNEL BANDWIDTH					
Test mode	CH	Frequency MHz	FL/FH(MHz)	Bandwidth MHz	Limit MHz
GFSK	CH00	2402	2401.583	0.834	>2400.0 <2483.5
	CH78	2480	2480.406	0.811	
Test Result	PASS				

Note: FL is the lowest frequency of the 99% occupied bandwidth of power envelope.
FH is the highest frequency of the 99% occupied bandwidth of power envelope.

1Mbps CH00

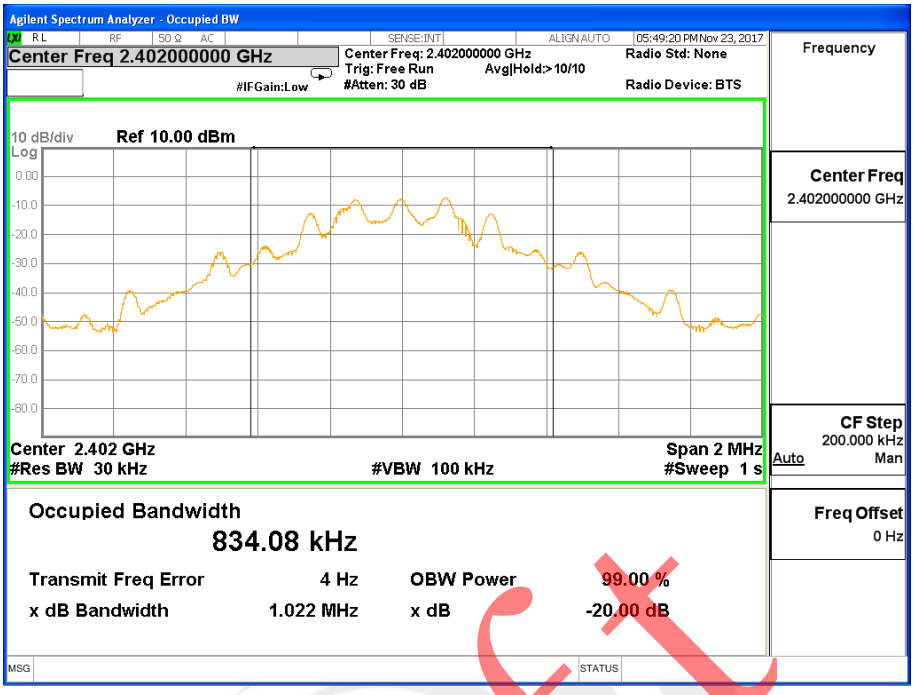

1Mbps CH78

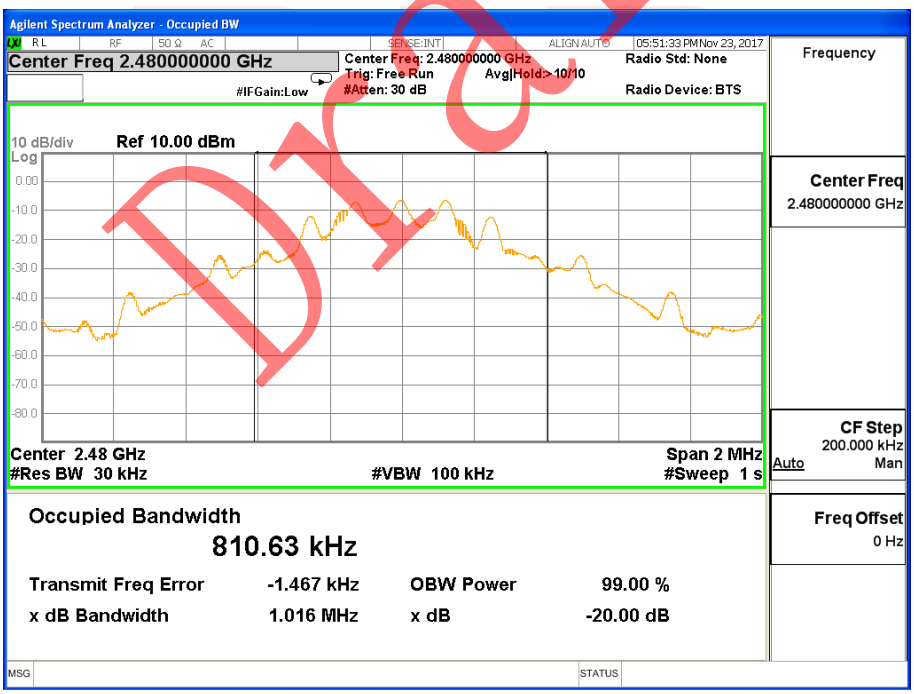

7. TRANSMITTER UNWANTED EMISSIONS IN THE OOB DOMAIN

7.1 APPLIED PROCEDURES / LIMIT

Clause	Frequency	Limit
4.3.1.9.3	2400-BW~2400 2483.5~2483.5+BW	-10dBm/MHz
	2400-2BW~2400-BW 2483.5+BW~2483.5+2BW	-20dBm/MHz
	<2400-2BW >2483.5+2BW	-30dBm/MHz

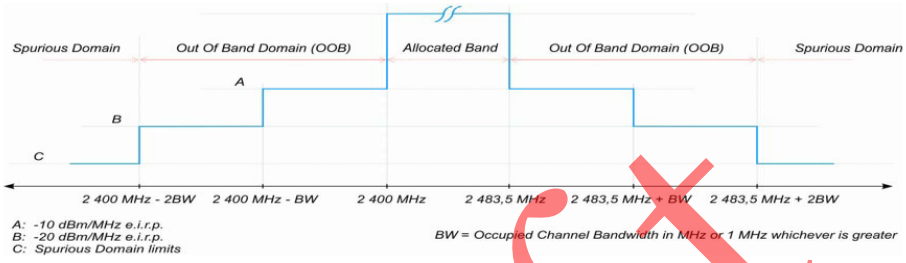

Figure 1: Transmit mask

7.2 MEASURING INSTRUMENTS AND SETTING

1.Please refer to ETSI EN 300 328 (V2.1.1) clause 5.4.8.1 for the test conditions.

2.Please refer to ETSI EN 300 328 (V2.1.1) clause 5.4.8.2 for the measurement method.

For systems using FHSS modulation, the measurements shall be performed during normal operation (hopping).

• Connect the UUT to the spectrum analyser and use the following settings:
- Centre Frequency: 2 484 MHz
- Span: 0 Hz
- Resolution BW: 1 MHz
- Filter mode: Channel filter
- Video BW: 3 MHz
- Detector Mode: RMS
- Trace Mode: Max Hold
- Sweep Mode: Continuous
- Sweep Points: Sweep Time [s] / (1 μs) or 5 000 whichever is greater
- Trigger Mode: Video trigger; in case video triggering is not possible, an external trigger source may be used
- Sweep Time: > 120 % of the duration of the longest burst detected during the measurement of the RF Output Power

7.3 TEST SETUP LAYOUT

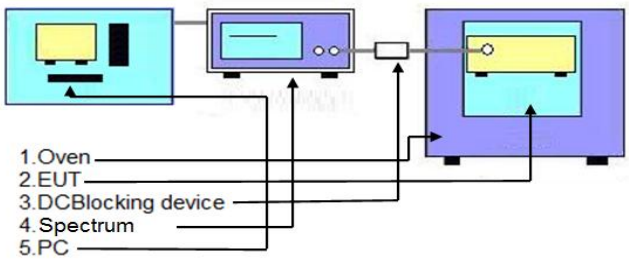

7.4 TEST RESULT

GFSK

Test Condition		Low		High	
		OOB EMISSION		OOB EMISSION	
		Segment A	Segment B	Segment A	Segment B
		maximum power	maximum power	maximum power	maximum power
		dBm/MHz	dBm/MHz	dBm/MHz	dBm/MHz
Nom (°c)	Nom (v)	-40.01	-41.01	-40.51	-41.27
Min (°c)	Max (v)	-40.58	-41.26	-41.11	-41.31
	Min (v)	-40.42	-41.86	-41.44	-41.95
Max (°c)	Max (v)	-40.37	-41.63	-41.21	-41.55
	Min (v)	-40.47	-41.81	-41.02	-42.30
Limit (dBm)		-10.00	-20.00	-10.00	-20.00
PASS/FAIL		PASS	PASS	PASS	PASS

Test Plot(Worst Mode)

1M Low

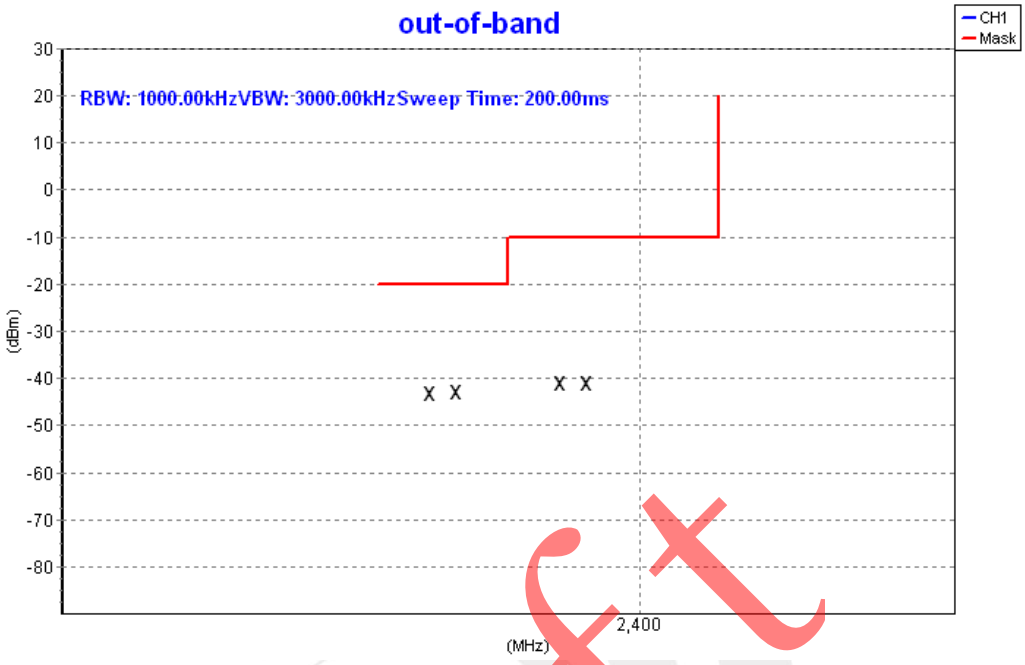

1M High

8. SPURIOUS EMISSIONS – TRANSMITTER

8.1 APPLIED PROCEDURES / LIMIT

Frequency range	Maximum power, e.r.p(≤1 GHz) e.i.r.p(> 1 GHz)	Bandwidth
30 MHz to 47 MHz	-36 dBm	100 KHz
47 MHz to 74 MHz	-54 dBm	100 KHz
74 MHz to 87.5 MHz	-36 dBm	100 KHz
87.5 MHz to 118 MHz	-54 dBm	100 KHz
118 MHz to 174 MHz	-36 dBm	100 KHz
174 MHz to 230 MHz	-54 dBm	100 KHz
230 MHz to 470 MHz	-36 dBm	100 KHz
470 MHz to 862 MHz	-54 dBm	100 KHz
862 MHz to 1 GHz	-36 dBm	100 KHz
1 GHz to 12.75 GHz	-30 dBm	1 MHz

8.2 MEASURING INSTRUMENTS AND SETTING

1.Please refer to ETSI EN 300 328 (V2.1.1) clause 5.4.9.1 for the test conditions.
2.Please refer to ETSI EN 300 328 (V2.1.1) clause 5.4.9.2 for the measurement method.

Spectrum Analyzer	Setting	
Frequency Start to Stop	30 MHz to 1000 MHz	1000 MHz to 12750MHz
Resolution bandwidth	100 kHz	1 MHz
Video bandwidth	300 kHz	3 MHz
Filter type	3 dB (Gaussian)	
Detector mode	Peak	
Trace Mode	Max Hold	
Sweep Points	⩾ 19 400 (Set as 20000)	⩾ 23 500 (Set as 24000)
Sweep Time	For non continuous transmissions (duty cycle less than 100 %), the sweep time shall be sufficiently long,Below 1GHz such that for each 100 kHz frequency step, Above 1GHz such that for each 1MHz frequency step the measurement time is greater than two transmissions of the UUT, on any channel	

8.3 TEST PROCEDURES

a. The EUT was placed on the top of the turntable in open test site area.

b. The test shall be made in the transmitting mode. The turntable was rotated by 360 degrees to determine the position of the highest radiation.

c. This measurement shall be repeated with the transmitter in standby mode where applicable.

d. For 30~1000MHz spurious emissions measurement, the broad band bi-log receiving antenna was placed 3 meters far away from the turntable.

e. The broadband receiving antenna was fixed on the same height with the EUT to find each suspected emissions of both horizontal and vertical polarization. Each recorded suspected value is indicated as Read Level (Raw).

f. Replace the EUT by standard antenna and feed the RF port by signal generator.

g. Adjust the frequency of the signal generator to the suspected emission and slightly rotate the turntable to locate the position with maximum reading.

h. Adjust the power level of the signal generator to reach the same reading with Read Level (Raw).

i. The level of the spurious emission is the power level of (8) plus the gain of the standard antenna in dBi and minus the loss of the cable used between the signal generator and the standard antenna.

j. If the level calculated in (9) is higher than limit by more than 6dB, then lower the RBW of the spectrum analyzer to 30KHz. If the level of this emission does not change by more than 2dB, then it is taken as narrowband emission, otherwise, wideband emission.

k. The measurement shall be repeated at the lowest and the highest channel of the stated frequency range.

l. EUT Orthogonal Axis:
"X" - denotes Laid on Table; "Y" - denotes Vertical Stand; "Z" - denotes Side Stand.

8.4 TEST SETUP LAYOUT

(A) Radiated Emission Test Set-Up, Frequency Below 1000MHz

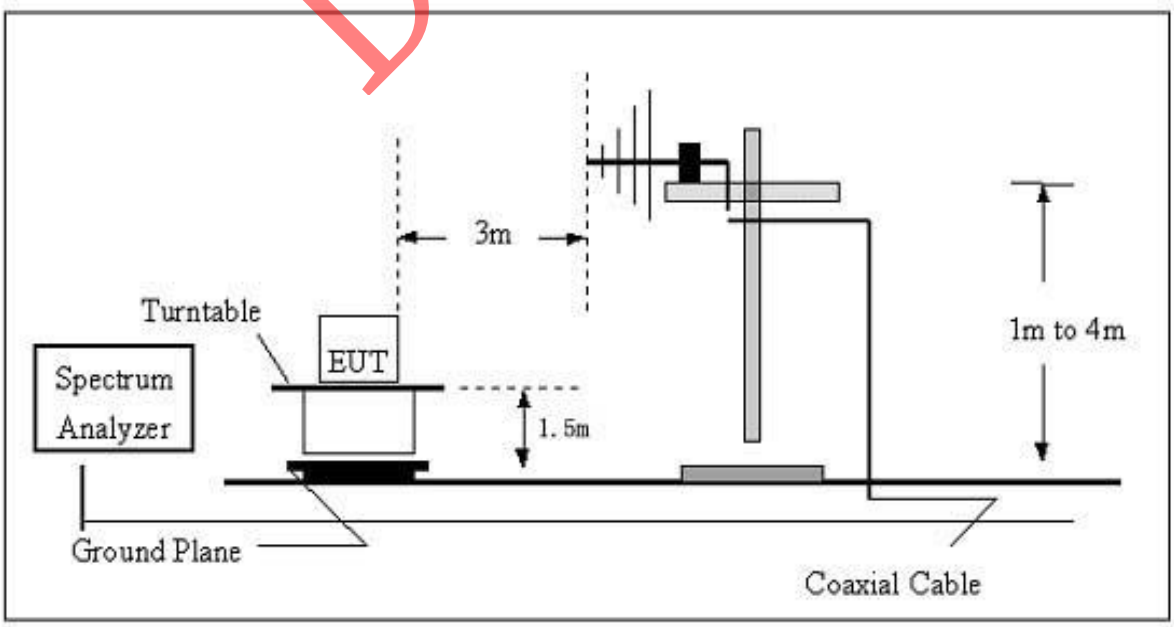

(B) Radiated Emission Test Set-Up Frequency Above 1 GHz

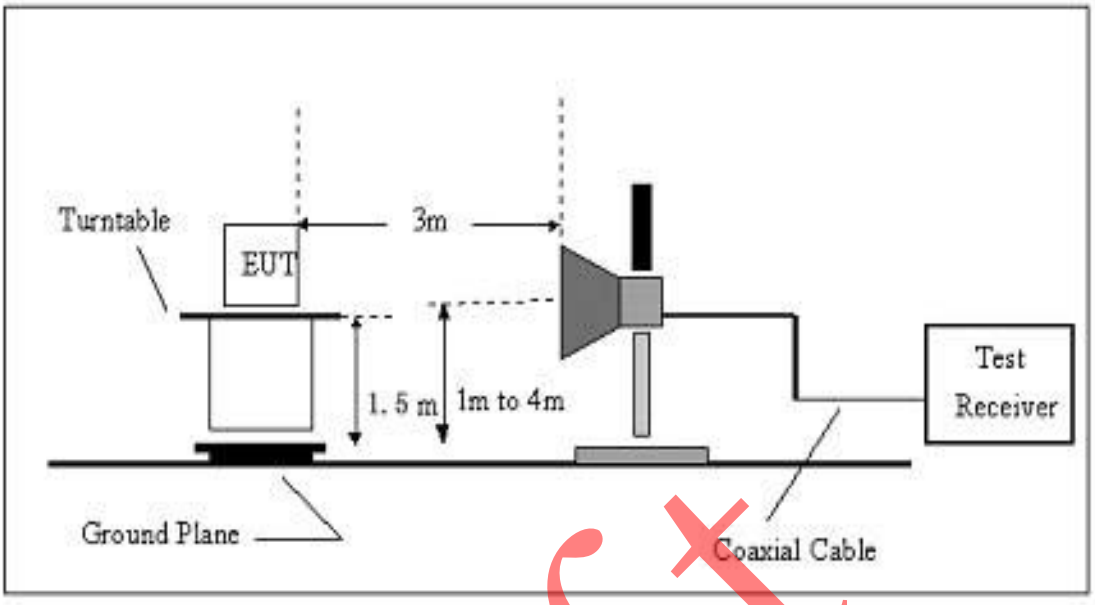

8.5 EUT OPERATION DURING TEST

1. The EUT was programmed to be in continuously transmitting mode.
2. For the initial investigation on the highest, middle, lowest frequency, no significant differences in spurious emissions were observed between these 3 modes. The worst test data was shown
3. There is a filter used during the test, the fundamental signals will be not shown in the plot.
4. The EUT is connected with the GSM base station when the BT is transmiting.

8.6 TEST RESULT

TX GFSK/2402MHz

Horizontal

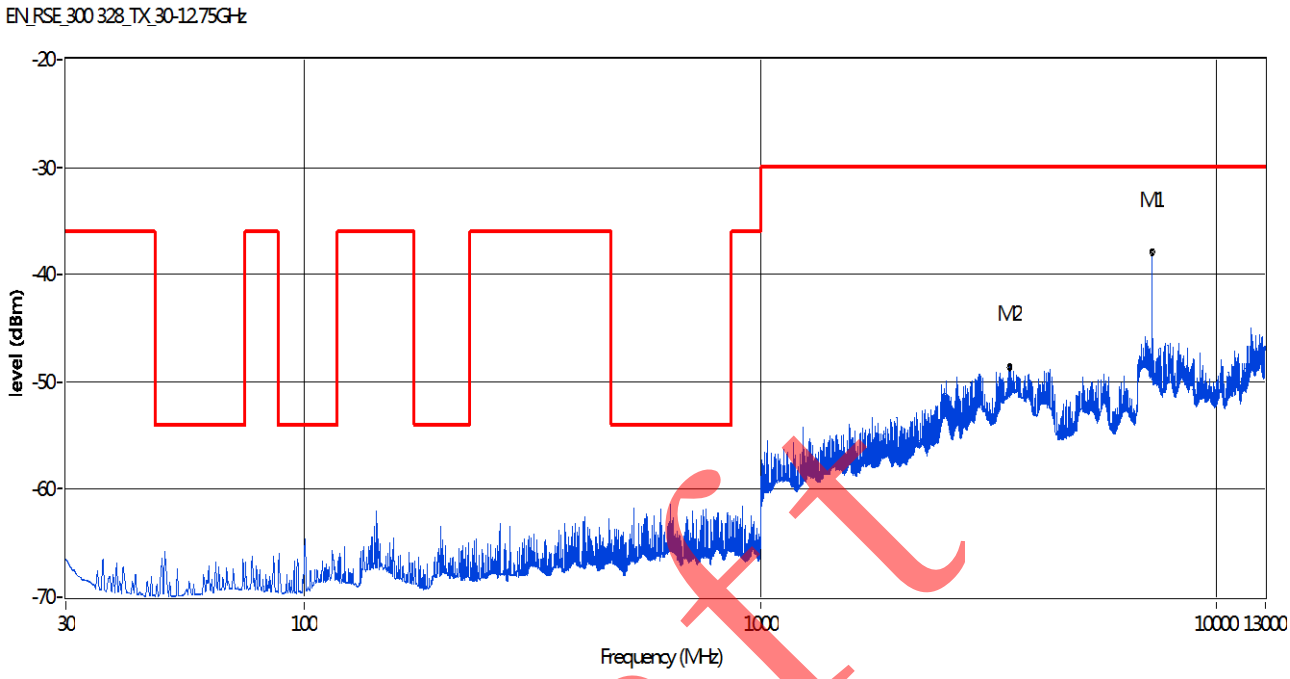

Vertical

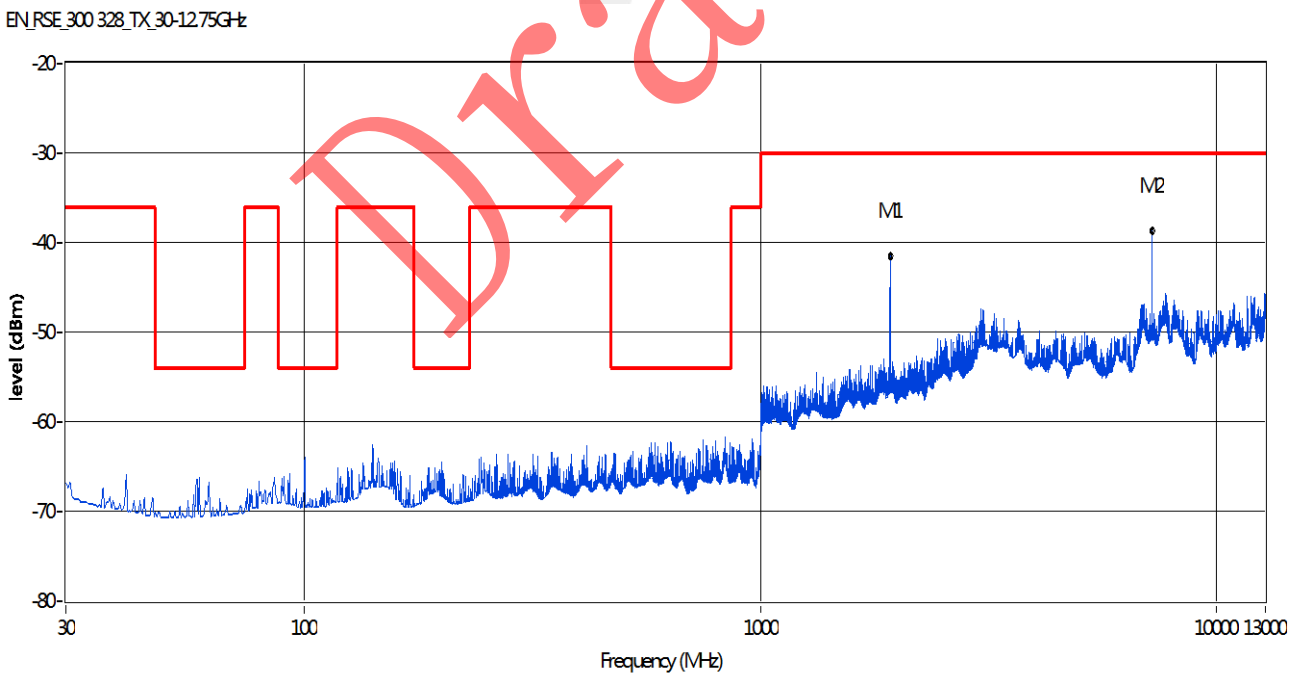

Remark:
1. The emission behaviour belongs to narrowband spurious emission.
2. The all data rate modes had been test, but only worse test data was recorded in the test report.

TEST RESULT(30MHz ~ 12750MHz)

TX GFSK/2480MHz

Horizontal

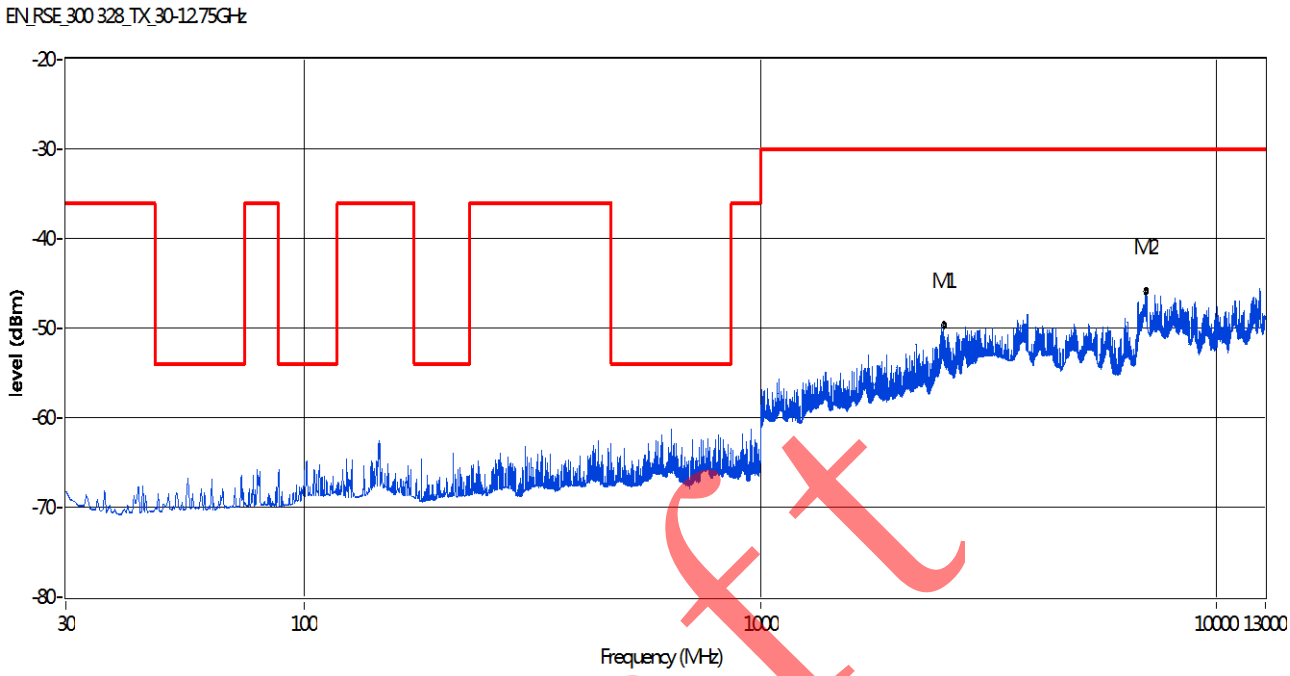

Vertical

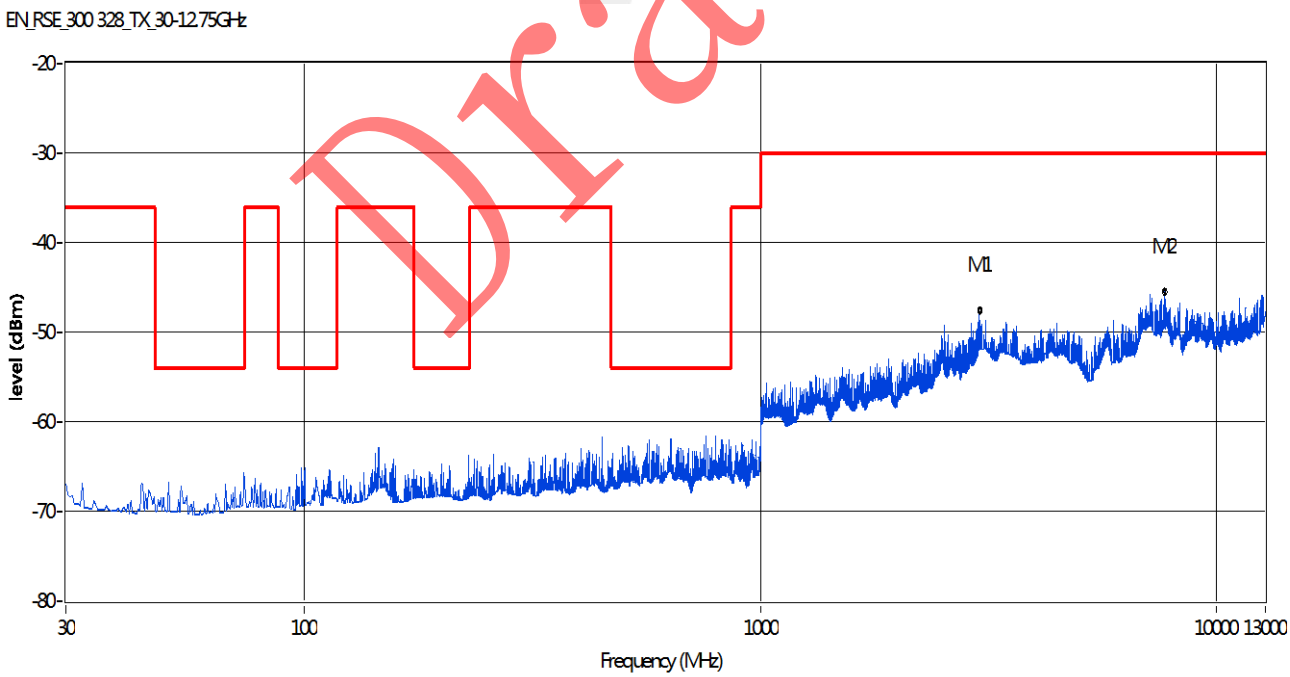

Remark:
1. The emission behaviour belongs to narrowband spurious emission.
2. The all data rate modes had been test, but only worse test data was recorded in the test report.

9. SPURIOUS EMISSIONS – RECEIVER

9.1 APPLIED PROCEDURES / LIMIT

Clause	Test Item	Frequency(MHz)	Limit
4.3.1.11.3	Spurious emissions	30-1000	-57dBm
	(radiated)	1000-12750	-47dBm

9.2 MEASURING INSTRUMENTS AND SETTING

1.Please refer to ETSI EN 300 328 (V2.1.1) clause 5.4.10.1 for the test conditions.

2.Please refer to ETSI EN 300 328 (V2.1.1) clause 5.4.10.2 for the measurement method.

Spectrum Analyzer	Setting	
Frequency Start to Stop	30 MHz to 1000 MHz	1000 MHz to 12750MHz
Resolution bandwidth	100 kHz	1 MHz
Video bandwidth	300 kHz	3 MHz
Filter type	3 dB (Gaussian)	
Detector mode	Peak	
Trace Mode	Max Hold	
Sweep Points	⩾ 19 400 (Set as 20000)	⩾ 23 500 (Set as 24000)
Sweep Time	For non continuous transmissions (duty cycle less than 100 %), the sweep time shall be sufficiently long,Below 1GHz such that for each 100 kHz frequency step, Above 1GHz such that for each 1MHz frequency step the measurement time is greater than two transmissions of the UUT, on any channel	

9.3 TEST PROCEDURES

a. The EUT was placed on the top of the turntable in open test site area.

b. The test shall be made in the receiving mode. The turntable was rotated by 360 degrees to determine the position of the highest radiation.

c. For 30~1000MHz/1000~12750MHz spurious emissions measurement, the broad band bi-log receiving antenna was placed 3 meters far away from the turntable.

d. The broadband receiving antenna was fixed on the same height with the EUT to find each suspected emissions of both horizontal and vertical polarization. Each recorded suspected value is indicated as Read Level (Raw).

e. Replace the EUT by standard antenna and feed the RF port by signal generator.

f. Adjust the frequency of the signal generator to the suspected emission and slightly rotate the turntable to locate the position with maximum reading.

g. Adjust the power level of the signal generator to reach the same reading with Read Level (Raw).

h. The level of the spurious emission is the power level of (7) plus the gain of the standard antenna in dBi and minus the loss of the cable used between the signal generator and the standard antenna.

i. The measurement shall be repeated at the lowest and the highest channel of the stated frequency range.

j. EUT Orthogonal Axis:©
"X" - denotes Laid on Table; "Y" - denotes Vertical Stand; "Z" - denotes Side Stand.

9.4 EUT OPERATION DURING TEST

The EUT was programmed to be in continuously receiving mode.

9.5 TEST SETUP LAYOUT

(A) Radiated Emission Test Set-Up, Frequency Below 1000MHz

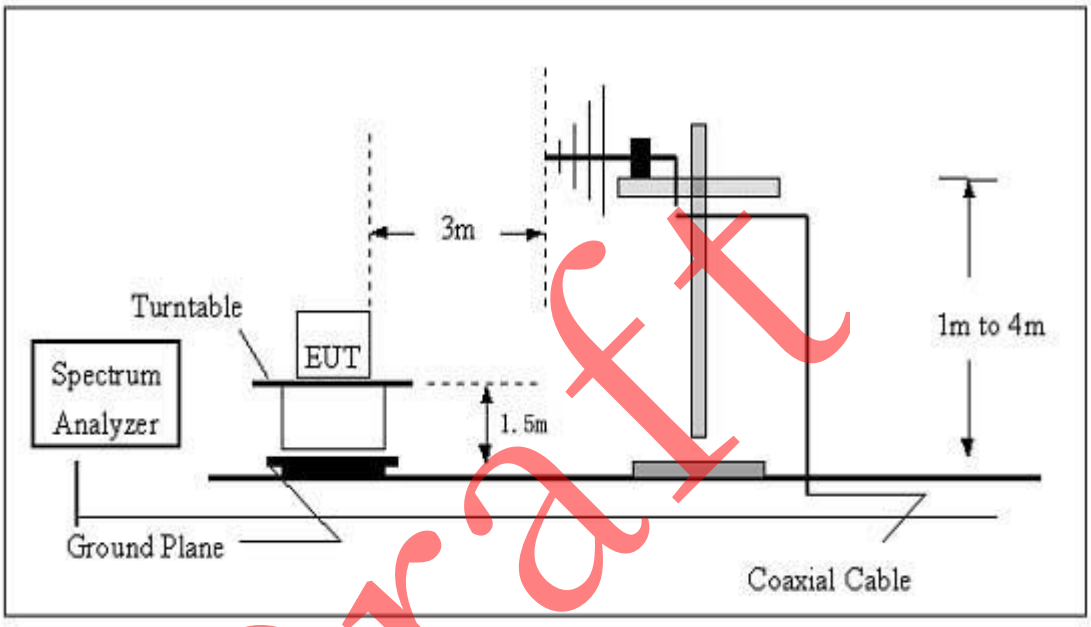

(B) Radiated Emission Test Set-Up Frequency Above 1 GHz

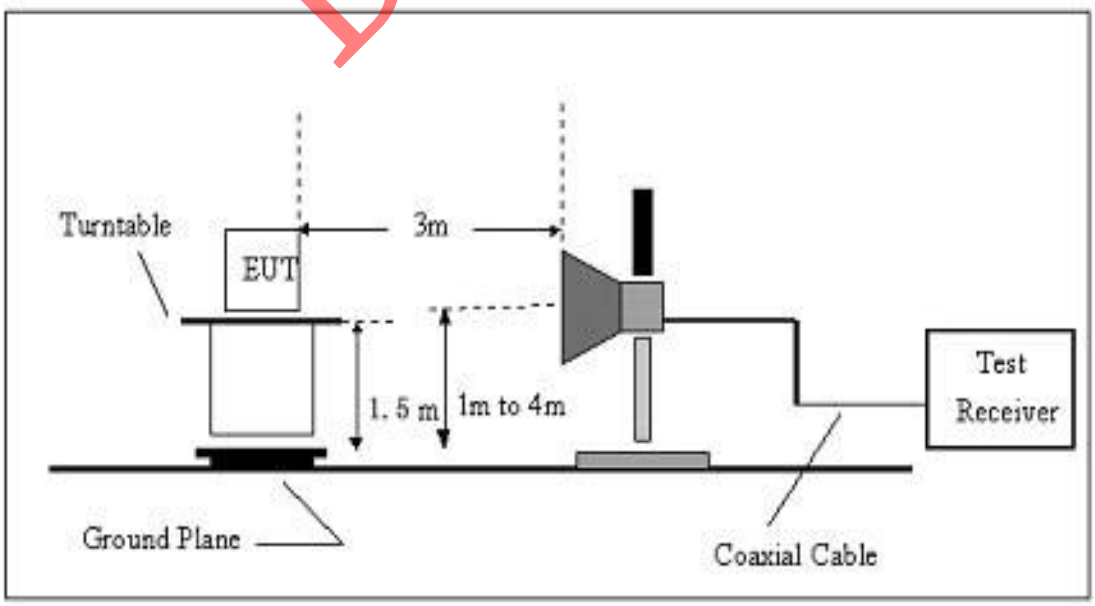

9.6 TEST RESULT

RX

Horizontal

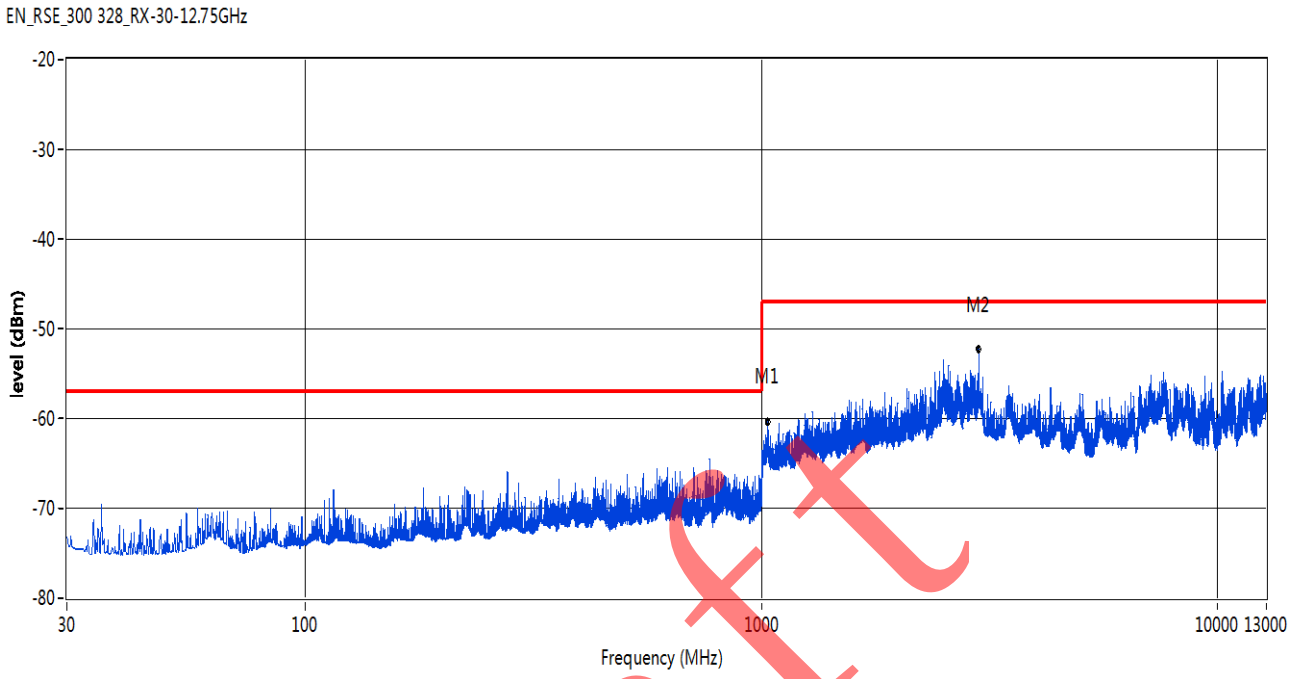

Vertical

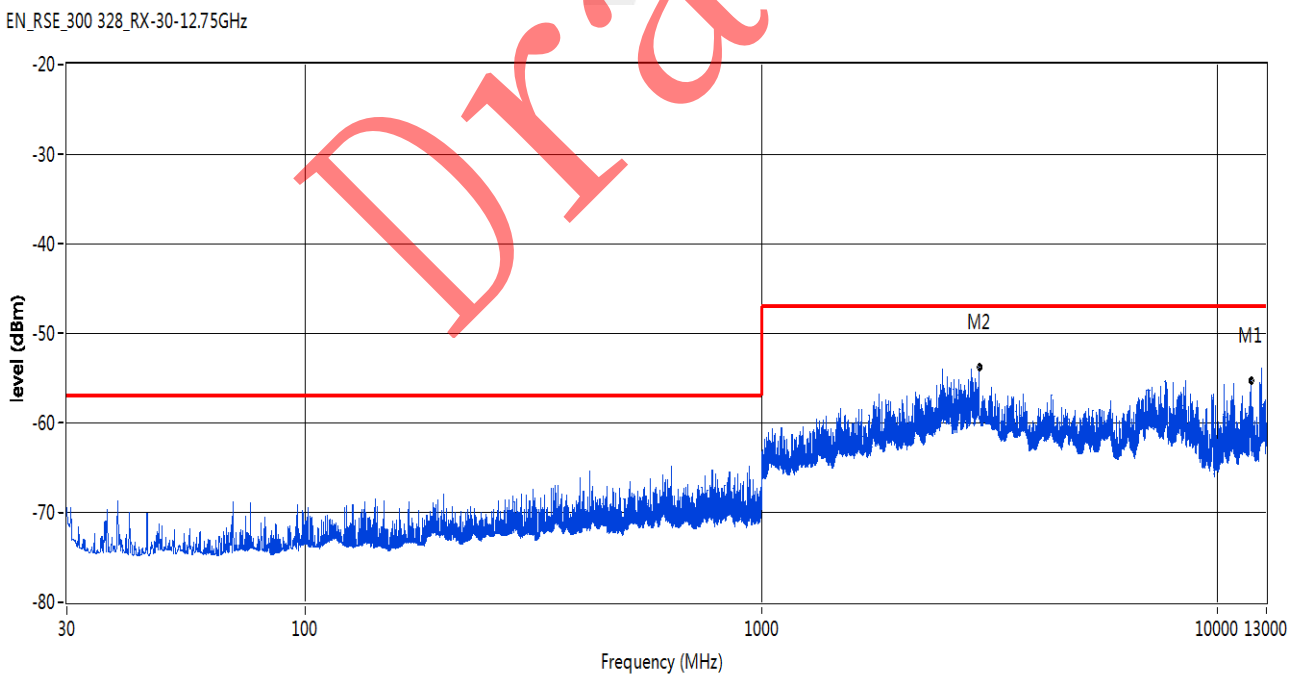

Remark:
1. The emission behaviour belongs to narrowband spurious emission.
2. The all data rate modes had been test, but only worse test data was recorded in the test report.

10. RECEIVER BLOCKING

10.1 APPLIED PROCEDURES / LIMIT

While maintaining the minimum performance criteria as defined in clause 4.3.1.12.3, the blocking levels at specified frequency offsets shall be equal to or greater than the limits defined for the applicable receiver category provided in table 6, table 7 or table 8.

Receiver Category 1

Table 6: Receiver Blocking parameters for Receiver Category 1 equipment

Wanted signal mean power from companion device (dBm)	Blocking signal frequency (MHz)	Blocking signal power (dBm)	Type of blocking Signal
Pmin + 6 dB	2 380 2 503,5	-53	CW
Pmin + 6 dB	2 300 2 330 2 360	-47	CW
Pmin + 6 dB	2 523,5 2 553,5 2 583,5 2 613,5 2 643,5 2 673,5	-47	CW
NOTE 1: Pmin is the minimum level of the wanted signal (in dBm) required to meet the minimum performance criteria as defined in clause 4.3.2.11.3 in the absence of any blocking signal. NOTE 2: The levels specified are levels in front of the UUT antenna. In case of conducted measurements, the levels have to be corrected by the actual antenna assembly gain.			

Receiver Category 2

Table 7: Receiver Blocking parameters for Receiver Category 2 equipment

Wanted signal mean power from companion device (dBm)	Blocking signal frequency (MHz)	Blocking signal power (dBm)	Type of blocking Signal
Pmin + 6 dB	2 380 2 503,5	-57	CW
Pmin + 6 dB	2 300 2 583,5	-47	CW
NOTE 1: Pmin is the minimum level of the wanted signal (in dBm) required to meet the minimum performance criteria as defined in clause 4.3.2.11.3 in the absence of any blocking signal. NOTE 2: The levels specified are levels in front of the UUT antenna. In case of conducted measurements, the levels have to be corrected by the actual antenna assembly gain.			

Receiver Category 3

Table 8: Receiver Blocking parameters for Receiver Category 3 equipment

Wanted signal mean power from companion device (dBm)	Blocking signal frequency (MHz)	Blocking signal power (dBm)	Type of blocking Signal
Pmin + 12 dB	2 380 2 503,5	-57	CW
Pmin + 12 dB	2 300 2 583,5	-47	CW
NOTE 1: Pmin is the minimum level of the wanted signal (in dBm) required to meet the minimum performance criteria as defined in clause 4.3.2.11.3 in the absence of any blocking signal. NOTE 2: The levels specified are levels in front of the UUT antenna. In case of conducted measurements, the levels have to be corrected by the actual antenna assembly gain.			

10.2 TEST PROCEDURES

1. Please refer to ETSI EN 300 328 (V2.1.1) clause 5.4.11.1 for the test conditions.

2. Please refer to ETSI EN 300 328 (V2.1.1) clause 5.4.11.2 for the measurement method.

- RBW: use next available RBW setting below the measured Occupied Channel Bandwidth Occupied Channel Bandwidth)
- Filter type: Channel Filter
- VBW: > RBW
- RBW:1M
  VBW:3M (Max 2M)
- Detector Mode: RMS
- Centre Frequency: Equal to the hopping frequency to be tested
- Span: 0 Hz
- Sweep time: > Channel Occupancy Time of the UUT. If the Channel Occupancy Time is non-contiguous (non-LBT based equipment), the sweep time shall be sufficient to cover the period over which the Channel Occupancy Time is spread out.
- Trace Mode: Clear/Write
- Trigger Mode: Video

10.3 TEST SETUP LAYOUT

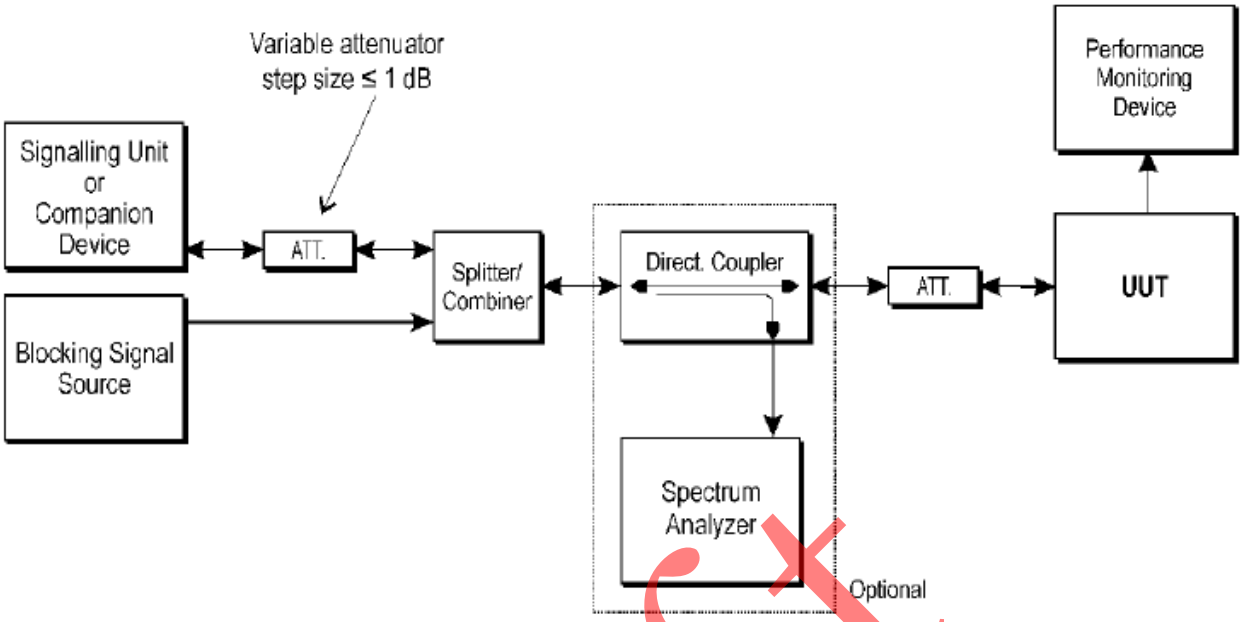

10.4 TEST RESULT

Note: EUT belongs to Receiver Category 2, since the output power is greater than 0dBm, less than 10dBm.

GFSK Hopping Worst

Wanted signal mean power from companion device (dBm)	Blocking signal frequency (MHz)	Blocking signal power(dBm) CW	PER (%)	Limit(%)	Results
-62	2 380 2 503,5	-57	0.39%	10%	PASS
			0.42%		
	2 300 2 583,5	-47	0.16%		PASS
			0.30%		
NOTE: (1)The minimum performance criterion shall be a PER less than or equal to 10 %. The manufacturer may declare alternative performance criteria as long as that is appropriate for the intended use of the equipment (see clause 5.4.1.t). (2) Pmin=-68dBm					

11. ADAPTIVE (CHANNEL ACCESS MECHANISM)

11.1 APPLIED PROCEDURES / LIMIT

The frequency range of the equipment is determined by the lowest and highest

Adaptive Frequency Hopping using LBT based DAA: 1. COT ≤ 60 ms; 2. Idle Period = 5% of COT; 3.Detection threshold level = -70 dBm/MHz + (20 dBm - Pout e.i.r.p.)/1 MHz (Pout in dBm).
Adaptive Frequency Hopping using other forms of DAA (non-LBT based): 1.The frequency shall remain unavailable for a minimum time equal to 1 second or 5 times the actual number of hopping frequencies in the current (adapted) channel map used by the equipment 2. COT ≤ 40ms; 3. Idle Period = 5% of COT; 4. Detection threshold level = -70 dBm/MHz + (20 dBm - Pout e.i.r.p.)/1 MHz (Pout in dBm).
Short Control Signalling Transmissions: Short Control Signalling Transmissions shall have a maximum duty cycle TxOn / (TxOn + TxOff) ratio of 10 % within any observation period of 50 ms.

11.2 TEST PROCEDURES

1. Please refer to ETSI EN 300 328 (V2.1.1) clause 5.4.6.1 for the test conditions.
2. Please refer to ETSI EN 300 328 (V2.1.1) clause 5.4.6.2 for the measurement method.
3. The spectrum analyzer sweep was triggered by the start of the interfering signal, with the interfering signal present, a 100 % duty cycle CW signal is inserted as the blocking signal.

- RBW: ≥ Occupied Channel Bandwidth (if the analyzer does not support this setting, the highest available setting shall be used)
- RBW: use next available RBW setting below the measured Occupied Channel Bandwidth
- Filter type: Channel Filter
- RBW:1M/VBW:3M
- Detector Mode: RMS
- Centre Frequency: Equal to the hopping frequency to be tested.
- Span: 0 Hz
- Sweep time: > Channel Occupancy Time of the UUT. If the Channel Occupancy Time is non-contiguous (non-LBT based equipment), the sweep time shall be sufficient to cover the period over which the Channel Occupancy Time is spread out
- Trace Mode: Clear/Write
- Trigger Mode: Video

11.3 TEST SETUP LAYOUT

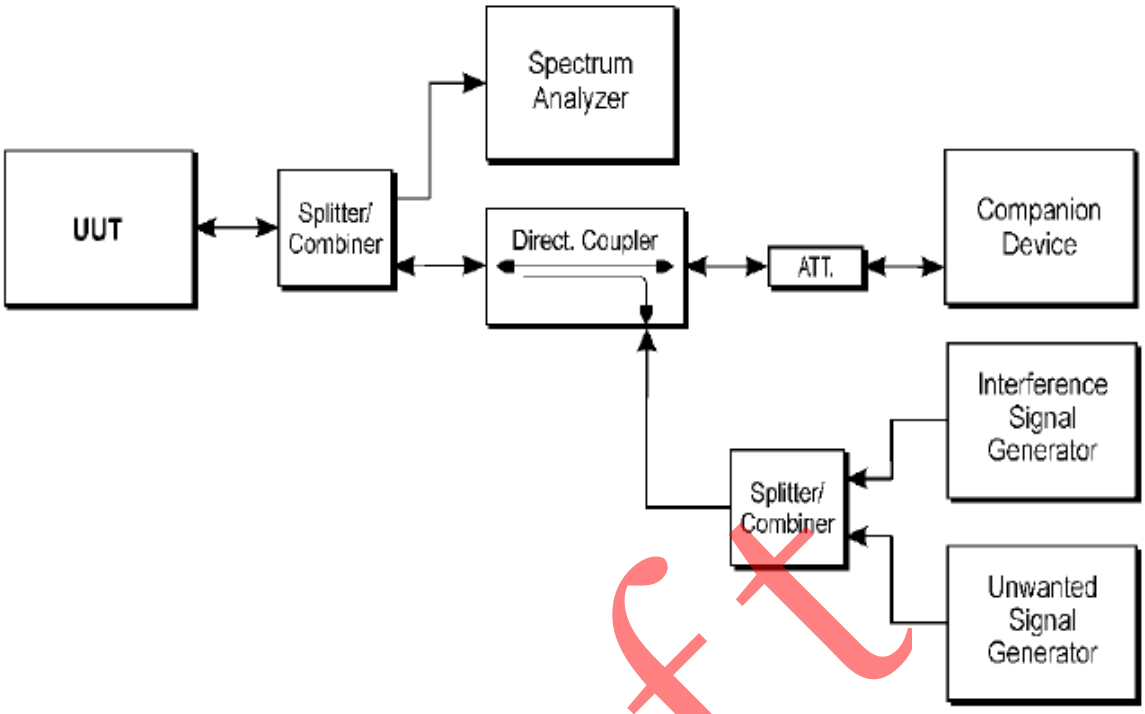

a. bt is normal transmission
b. interference shall be injected -> bt shall stop transmission.
c. blocking shall be injected -> bt does not resume any normal transmission
d. Removing the interference and blocking signal

11.4 TEST RESULTS

Mode	Stop time after interfering signal(s)	
	low	high
TX Mode	N/A	N/A

Short Control Signalling Transmissions

Mode	Maximum duty cycle(ms)		Limit(ms)
	Low	High	
TX mode	N/A	N/A	N/A

The EUT is not applicable

Test Setup Photos

※※※※※END OF THE REPORT※※※※※